REFSPECS
REFRIGERATION SPECIALTIES LTD

Refrigeration Specialties Ltd

p: +64 9 582 0200
p: 0800 996 003
f: +64 9 580 0468

181A Station Rd
Penrose,
Auckland 1061

PO Box 17284
Greenlane,
Auckland 1546
New Zealand

Shop Online at www.refspecs.co.nz

REFRIGERATION SPECIALITIES LIMITED - TERMS & CONDITIONS OF TRADE

1. DEFINITIONS

1.1 "Refrigeration Specialties" shall mean Refrigeration Specialties Limited, or any agents or employees thereof.
1.2 "Customer" shall mean the Customer, any person acting on behalf of and with the authority of the Customer, or any person purchasing goods and services from Refrigeration Specialties.
1.3 "Goods" shall mean:
1.3.1 all Goods supplied by Refrigeration Specialties to the Customer; and
1.3.2 all inventory of the Customer that is supplied by Refrigeration Specialties; and
1.3.3 all Goods supplied by Refrigeration Specialties and further identified in any invoice issued by Refrigeration Specialties to the Customer, which invoices are deemed to be incorporated into and form part of this agreement; and

1.3.4 all Goods that are marked as having been supplied by Refrigeration Specialties or that are stored by the Customer in a manner that enables them to be identified as having been supplied by Refrigeration Specialties; and
1.3.5 all of the Customer's present and after-acquired Goods to or in which Goods or materials supplied or financed by Refrigeration Specialties have been attached or incorporated.
1.3.6 The above descriptions may overlap but each is independent of and does not limit the others.
1.4 "Goods" shall also mean all goods, services and advice provided by Refrigeration Specialties to the Customer and shall include without limitation, insurance charges, freight costs, or any fee or charge associated with the supply of Goods by Refrigeration Specialties to the Customer.
1.5 "Price" shall mean the cost of the Goods as agreed between Refrigeration Specialties and the Customer and includes all disbursements e.g. charges Refrigeration Specialties pay to others on the Customer's behalf subject to clause 4 of this contract.

2. ACCEPTANCE

2.1 Any instructions received by Refrigeration Specialties from the Customer for the supply of Goods, whether by phone, in writing or authorised via the Customer's internet sales login and password, shall constitute a binding contract and acceptance of the terms and conditions contained herein.

3. COLLECTION AND USE OF INFORMATION

3.1 The Customer authorises Refrigeration Specialties to collect, retain and use any information about the Customer, for the purpose of assessing the Customer's credit worthiness, enforcing any rights under this contract, or marketing any Goods provided by Refrigeration Specialties to any other party.

3.2 The Customer authorises Refrigeration Specialties to disclose any information obtained to any person for the purposes set out in clause 3.1.
3.3 Where the Customer is a natural person the authorities under clauses 3.1 and 3.2 are authorities or consents for the purposes of the Privacy Act 1993.

4. PRICE

4.1 Where no price is stated in writing or agreed to orally the Goods shall be deemed to be sold at the current amount as such Goods are sold by Refrigeration Specialties at the time of the contract.

4.2 The price may be increased by the amount of any reasonable increase in the cost of supply of the Goods that is beyond the control of Refrigeration Specialties between the date of the contract and delivery of the Goods.

5. PAYMENT

5.1 Unless otherwise agreed payment for Goods and services shall be made in full on or before the 20th day of the month following the date of the invoice ("the due date").
5.2 Interest may be charged on any amount owing after the due date at the rate of 2.5% per month or part month.
5.3 Any expenses, disbursements and legal costs incurred by Refrigeration Specialties in the enforcement of any rights contained in this contract shall be paid by the Customer, including any actual solicitor's fees or debt collection agency fees.
5.4 Receipt of a cheque, bill of exchange, or other negotiable instrument shall not constitute payment until such negotiable instrument is paid in full.
5.5 A deposit may be required.
5.6 Refrigeration Specialties shall be entitled to set and amend at any time, a limit on any credit arrangement offered to the Customer, and without notice to terminate or suspend any credit arrangement with Customer in the event of:
5.6.1 The Customer defaulting in any term or condition contained herein; or
5.6.2 The Customer's actions, statements or conduct repudiates the contract by making it clear it does not intend to perform its obligations under it,
and in either event all monies owing by the Customer to Refrigeration Specialties shall be immediately due and payable notwithstanding that the time(s) for payment is yet to arrive.

6. QUOTATION

6.1 Where a quotation is given by Refrigeration Specialties for Goods:
6.1.1 Unless otherwise agreed the quotation shall be valid for thirty (30) days from the date of issue; and
6.1.2 The quotation shall be exclusive of goods and services tax unless specifically stated to the contrary;
6.1.3 Refrigeration Specialties reserves the right to alter the quotation because of circumstances beyond its control.
6.2 Where Goods are required in addition to the quotation the Customer agrees to pay for the additional cost of such Goods.

7. RISK

7.1 The Goods remain at Refrigeration Specialties' risk until delivery to the Customer.
7.2 Delivery of Goods shall be deemed complete when Refrigeration Specialties gives possession of the Goods directly to the Customer or possession of the Goods is given to a carrier, courier, or other bailee for purposes of transmission to the Customer.

8. TITLE AND SECURITY (PERSONAL PROPERTY SECURITIES ACT 1999)

8.1 Title in any Goods supplied by Refrigeration Specialties passes to the Customer only when the Customer has made payment in full for all Goods provided by Refrigeration Specialties and of all other sums due to Refrigeration Specialties by the Customer on any account whatsoever. Until all sums due to Refrigeration Specialties by the Customer have been paid in full, Refrigeration Specialties has a security interest in all Goods. The Customer waives its right to receive a verification statement in respect of any financing statement or financing change statement relating to such security interest.
8.2 If the Goods are attached, fixed, or incorporated into any property of the Customer, by way of any manufacturing or assembly process by the Customer or any third party, title in the Goods
shall remain with Refrigeration Specialties until the Customer has made payment for all Goods, and where those Goods are mixed with other property so as to be part of or a constituent of any new Goods, title to these new Goods shall deemed to be assigned to Refrigeration Specialties as security for the full satisfaction by the Customer of the full amount owing between Refrigeration Specialties and Customer.

8.3 The Customer gives irrevocable authority to Refrigeration Specialties to enter any premises occupied by the Customer or on which Goods are situated at any reasonable time after default by the Customer or before default if Refrigeration Specialties believes a default is likely and to remove and repossess any Goods and any other property to which Goods are attached or in which Goods are incorporated. Refrigeration Specialties shall not be liable for any costs, damages, expenses or losses incurred by the Customer or any third party as a result of this action, nor liable in contract or in tort or otherwise in any way whatsoever unless by statute such liability cannot be excluded. Refrigeration Specialties may either resell any repossessed Goods and credit the Customer's account with the net proceeds of sale (after deduction of all repossession, storage, selling and other costs) or may retain any repossessed Goods and credit the Customer's account with the invoice value thereof less such sum as Refrigeration Specialties reasonably determines on account of wear and tear, depreciation, obsolescence and costs.
8.4 Where Goods are retained by Refrigeration Specialties pursuant to clause 8.3 the Customer waives the right to receive notice under s.120 of the Personal Property Securities Act 1999 ("PPSA") and to object under s.121 of the PPSA.
8.5 The following shall constitute defaults by the Customer:
8.5.1 Non payment of any sum by the due date.
8.5.2 The Customer intimates that it will not pay any sum by the due date.
8.5.3 Any Goods are seized by any other creditor of the Customer or any other creditor intimates that it intends to seize Goods.
8.5.4 Any Goods in the possession of the Customer are materially damaged while any sum due from the Customer to Refrigeration Specialties remains unpaid.
8.5.5 The Customer is bankrupted or put into liquidation or a receiver is appointed to any of the Customer's assets.
8.5.6 A Court judgment is entered against the Customer and remains unsatisfied for seven (7) days.
8.5.7 Any material adverse change in the financial position of the Customer.

9. PAYMENT ALLOCATION

9.1 Refrigeration Specialties may in its discretion allocate any payment received from the Customer towards any invoice that Refrigeration Specialties determines and may do so at the time of receipt or at any time afterwards and on default by the Customer may reallocate any payments previously received and allocated. In the absence of any payment allocation by Refrigeration Specialties, payment shall be deemed to be allocated in such manner as preserves the maximum value of Refrigeration Specialties' purchase money security interest in the Goods.

10. DISPUTES/RETURN OF GOODS

10.1 No claim relating to Goods will be considered unless made in writing within seven (7) days of delivery.
10.2 All Goods must be carefully checked upon receipt. No claims will be accepted if the Goods have been converted in any way.
10.3 Returns will only be accepted if the Goods supplied are not in accordance with the Customer's order.

11. WARRANTY

11.1 Manufacturer's warranties may apply.

12. LIABILITY

12.1 The Consumer Guarantees Act 1993, the Fair Trading Act 1986 and other statutes may imply warranties or conditions or impose obligations upon Refrigeration Specialties which cannot by law (or which can only to a limited extent by law) be excluded or modified. In respect of any such implied warranties, conditions or terms imposed on Refrigeration Specialties, Refrigeration Specialties liability shall, where it is allowed, be excluded or if not able to be excluded only apply to the minimum extent required by the relevant statute.
12.2 Except as otherwise provided by clause 12.1, Refrigeration Specialties shall not be liable for any loss or damage of any kind whatsoever, arising from the supply of Goods by Refrigeration Specialties to the Customer, including consequential or indirect loss nor any loss of profits, revenue, business opportunity, goodwill and/or anticipated savings whether suffered or incurred by the Customer or another person and whether in contract or tort (including negligence) or otherwise;

12.3 The Customer shall indemnify Refrigeration Specialties against all claims and loss of any kind whatsoever however caused or arising and without limiting the generality of the foregoing of this clause whether caused or arising as a result of the negligence of Refrigeration Specialties or otherwise, brought by any person in connection with any matter, act, omission, or error by Refrigeration Specialties its agents or employees in connection with the Goods.

13. CONSUMER GUARANTEES ACT

13.1 The guarantees contained in the Consumer Guarantees Act 1993 are excluded where the Customer acquires Goods from Refrigeration Specialties for the purposes of a business in terms of section 2 and 43 of that Act.

14. PERSONAL GUARANTEE OF COMPANY DIRECTORS OR TRUSTEES

14.1 If the Customer is a company, trust or other entity and if so requested by Refrigeration Specialties, the Customer shall procure that its director(s) or trustee(s), provide a personal guarantee of the Customer's obligations under this contract in the form required by Refrigeration Specialties. Any such guarantee shall not exclude the Customer in any way whatsoever from the liabilities and obligations contained in this contract. The guarantors and the Customer shall be jointly and severally liable under the terms and conditions of this contract and for payment of all sums due hereunder.

15. MISCELLANEOUS

15.1 Refrigeration Specialties shall not be liable for delay or failure to perform its obligations if the cause of the delay or failure is beyond its control.
15.2 Unless otherwise requested in writing, the Customer consents to receiving e-mails, faxes and other communications from Refrigeration Specialties providing the Customer with information about Refrigeration Specialties and Goods that may be of interest to the Customer.

15.3 Failure by Refrigeration Specialties to enforce any of the terms and conditions contained in this contract shall not be deemed to be a waiver of any of the rights or obligations Refrigeration Specialties has under this contract.
15.4 If any provision of this contract shall be invalid, void or illegal or unenforceable the validity existence, legality and enforceability of the remaining provisions shall not be affected, prejudiced or impaired.

REFSPECS
REFRIGERATION SPECIALTIES LTD

Table of contents

Product		Page
Brazing Alloys, Dektites		1
Chemicals		2
Tapes		3
Electronic Controls, Steam Humidifiers		4
Pressure Temperature Controls		4 - 8
	Ranco	9 - 10
	Fenshen	11
	Danfoss	11
	Dial Thermometer	11
Errecinque Pressure Hose, Capillary Couplers		12
Airconditioning Thermostats & Controllers		13
Defrost Controls		14
Fan Motors, Blades		15
Brass Fittings		16 - 18
Copper Fittings		19 - 21
Tube		22
Pipe Clamps		23
Fastenings, Cable Ties		24
Insulation		25
Refrigerant		26
Oil		26
Condensate Pumps		27
Decorative Capping		28
Driers Sightglasses		29
Oil Line Components		30
Suction Line Components		31
Liquid Receivers, Rotalock Valves		31
Vibration Eliminators		32
Valves		
	EPR	33
	Check Valves	33
	Ball Valves	34
	Castel TX Valve Bodies	34
	Castel TX Valve Orifices	35
	Parker TX Valves & Elements	36
	Electronic TXV	37
	Relief Valves, Receiver Valves	38
	Solenoid Valves	38
Evaporators		39 - 40
Drain Pipe, Bolts Kits, Heat Trace		41
Condensing Units		42 - 45
Compressors		46 - 47
Compressor Accessories - Capacitors		48
Condensers		49
Tools	Yellow Jacket Tools	50 - 58
	& Vac Pumps	53
Tech Pages		

Prices and specification may change without notification. All prices are exclusive of GST and freight.

Brazing Alloy

	Stock Code	Vendors Code	Description	Unit	List Price
			Brazing Alloy		
	BA1525KG		Silver Brazing Alloy 15% 2.5mm	Kilo	
	BA1525STICK		Silver Brazing Alloy 15% 2.5mm	Stick	
	BA4515KG		Silver Brazing Alloy 45% 1.5mm	Kilo	
	BA4515STICK		Silver Brazing Alloy 45% 1.5mm	Stick	
	BAFLUX		Silver Brazing Flux 250gm	EACH	
	MAPP		MAPP Pro Gas 400g (Tall)	EACH	
	MAPQF5		MAP QF5 Gas Cylinder 154g (Short)	EACH	
	CG0002		Heat Seal Stick Aluminuim Repair	EACH	
			Dekitites		
	IMDB0-35		Dektite 0-35mm #0	EACH	
	IMDB05-55		Dektite 5-55mm #1	EACH	
	IMDB50-70		Dektite 50-70mm #2	EACH	
	IMDB05-120		Dektite 5-127mm #3	EACH	
	IMDB110-170		Dektite 100-200mm #5	EACH	
	IMDB160-220		Dektite 125-230mm #6	EACH	
	IMDB160-300		Dektite 150-300mm #7	EACH	
	IMDB290-440		Dektite 230-508mm #9	EACH	
			Silicone		
	CG0007		Silaseal Neutral Silicone Clear 310ml	EACH	
	CG0008		Silaseal Neutral Silicone White 310ml	EACH	
	CG0012		Bison GS Duct/Galvanised Sealant 380gr	EACH	
			Roof Pentration Kits		
	IMRFPN65		Top Hat Roof Flashing Kit 65mm	EACH	
	IMRFPN80		Top Hat Roof Flashing Kit 80mm	EACH	

Prices and specification may change without notification. All prices are exclusive of GST and freight.

Chemicals

	Stock Code	Vendors Code	Description	Unit	List Price
General Purpose					
	CLBIO01	ECD/1	Greenleaf Bioclean Cleaner Degreaser Trigger Spray	EACH	
	CLBIO05	ECD/5	Greenleaf Bioclean Cleaner Degreaser 5 Litre	EACH	
	CLBIO20	ECD/20	Greenleaf Bioclean Cleaner Degreaser 20 Litre	EACH	
Cooling Tower					
	CLAQUA05	QLF/5	Greenleaf Aquacide Microbiocide 5 Litre	EACH	
Coil Cleaners					
	CLDUCT01	R-CDD/1	Greenleaf Coil & Duct Disinfectant & Deodoriser Trigger Spray	EACH	
	CLDUCT05	R-CDD/5	Greenleaf Coil & Duct Disinfectant & Deodoriser 5 Litre Pack	EACH	
	CLFILT05	R-FCD/5	Greenleaf Air Filter Cleaner 5 Litre Pack	EACH	
	CLCOND01	R-FCC/1	Greenleaf Foam Brite Foaming Condenser Cleaner Trigger Spray	EACH	
	CLCOND05	R-FCC/5	Greenleaf Foam Brite Foaming Condenser Cleaner 5 Litre Pack	EACH	
	CLCOND20	R-FCC/20	Greenleaf Foam Brite Foaming Condenser Cleaner 20 Litre Pack	EACH	
	CLEVAP01	R-ECC/1	Greenleaf Evaporator Coil Cleaner Trigger Spray	EACH	
	CLEVAP05	R-ECC/5	Greenleaf Evaporator Coil Cleaner 5 Litre Pack	EACH	
	CLEVAP20	R-ECC/20	Greenleaf Evaporator Coil Cleaner 20 Litre Pack	EACH	
	CLSAFE01	R-SNC/1	Greenleaf Safe N Clean Non Caustic Condenser Cleaner Trigger Spray	EACH	
	CLSAFE05	R-SNC/5	Greenleaf Safe N Clean Non Caustic Condenser Cleaner 5 Litre Pack	EACH	
	CLSAFE20	R-SNC/20	Greenleaf Safe N Clean Non Caustic Condenser Cleaner 20 Litre Pack	EACH	
Ice Machine Cleaner					
	CLICE01	R-NSI/1	Greenleaf Ice Machine Cleaner One Litre	EACH	
	CLICE05	R-NSI/5	Greenleaf Ice Machine Cleaner 5 Litre	EACH	
	CLICE20	R-NSI/20	Greenleaf Ice Machine Cleaner 20 Litre	EACH	
	CG0009	BPT/6	Greenleaf Bio-Pan Slow Release Biocode Tablets	EACH	
Leak Detection					
	CMBUB01	R-BLD/1	Greenleaf Bubbles Micro Leak Detector Trigger Spray	EACH	
	CMBUB05	R-BLD/5	Greenleaf Bubbles Micro Leak Detector 5 Litre	EACH	
	CMBUB20	R-BLD/20	Greenleaf Bubbles Micro Leak Detector 20 Litre	EACH	
Coil Protection					
	CG0001	C-20BL	Coil Protectant Blue Spray	EACH	
			For MSDS Sheets please contact Refrigeration Specialties or visit www.refspecs.co.nz		

Prices and specification may change without notification. All prices are exclusive of GST and freight.

Tape / Thread Sealant

	Stock Code	Description	List Price
		Tapes	
	CG0011	Denso Tape 50mm x 10m Roll	
	IMT001	Black PVC Electrical/Utility Tape 48mm x 30M roll	
	IMT002	White PVC Electrical/Utility Tape 48mm x 30M roll	
	IMT003	Grey Duct Tape, Premium Grade Cloth/PVC 48mm x 30M roll	
	ITAPE	Foam Insulating Tape 3mm x 50mm x 9M roll	
	IMT004	Pure Aluminium Foil Tape 48mm x 45M roll	
		Thread Sealant	
	CG0006	Nylog Blue Pipe & Thread Sealant 30ml - RT201B	
		A viscoelastic liquid derived from	
		refrigeration grade lubricants.	
		Nonhardening, non-drying.	
	CG0010	"Teflon" Thread Seal Tape. 12mm x 10M roll	

Prices and specification may change without notification. All prices are exclusive of GST and freight.

Electronic Refrigeration Controllers

	Stock Code	Vendors Code	Description	List Price
			Med Temp Controllers	
	EPN001	Expert Nano 1	230V Med Temp Controller With Passive Defrost	
			2 HP Comp Relay	
	EP0005	ECP200 Base 2	230V Med Temp Controller With Passive Defrost, 1x Sensor	
			2HP Comp Relay, and Alarm Relay	
			Includes 1x 1.5m Sensors	
			Low Temp Nano Controller	
	EPN002	Expert Nano 3	230V Low Temp Controller With Forced Defrost 2x Sensors	
			16(6)A 250v Comp Relay & 8(3)A Fan And Defrost Relays	
			With Programmable Digital Input	
			Enclosure for Nano Controllers	
	EPBOX	Enclosure	Enclosure for Pego Nano Controllers 100 x 100 x 80 c/w cutout	
Comes with cutout				
			Low Temp Controllers	
	EP0010	ECP200 Base 4	230V Low Temp Controller With Forced Defrost 2x Sensors	
			2HP Comp Relay, 3kw Defrost & 500w Fan Relay	
			Relay	
			Includes 2x 1.5m Sensors	
	EP0020	ECP200 Expert	230V Low Temp Controller with electric defrost & 2x sensors	
			2HP Comp Relay, 3kw Defrost Heater Relay & 500w Fan Relay	
			With Alarm or Configurable Aux Relay	
			Complete with Siemens Isolation Switch and RCD Overload	
			Includes 2x Sensors	
	EP0021	ECP200 Expert Plus	Complete With Built in Data Logger. Logs to a SD Card	
			230V Low Temp Controller with electric defrost & 2x sensors	
			2HP Comp Relay, 3kw Defrost Heater Relay & 500w Fan Relay	
			With Alarm or Configurable Aux Relay	
			Complete with Siemens Isolation Switch and Overload	
			Includes 2x Sensors	
			Spare Board For Controllers	
	EPP100	200CHBASE4	Spares Electronic Boards for ECP200 Base	
			controllers	
	EPP117	MTE5SU16567KK16	Magneto-Thermal Overload for 200 Expert	

Prices and specification may change without notification. All prices are exclusive of GST and freight.

Electronic Controls, Sensors

	Stock Code	Vendors Code	Description	List Price
			Electronic TX Valve Controllers	
	EP0022	Expert 200 EXPEEV	230V Low Temp Controller with defrost & 2x sensors	
			2HP Comp Relay, 3kw Defrost Heater Relay & 500w Fan Relay	
			With PWM pulse driver for controlling electronic	
			expansion valves with on/off 230v coils	
			With Alarm or Configurable Aux Relay	
			Complete with Siemens Isolation Switch and Overload	
			Doesn't include senors or pressure transmitter	
	EP0024	PEV Pulse	For controlling electronic PWM expansion valves	
			with on/off 230v coils. Din Rail Mounting	
			Has built in display and one digital input	
			Doesn't include senors or pressure transmitter	
	ECP0023	PCAB Pulse Controller	230V Low Temp Controller with real time defrost defrost	
			and 0-10vdc output for speed drive of condensing fans.	
			With PWM pulse driver for controlling electronic	
			expansion valves with on/off 230v coils. Din Rail Mounting	
			Has built in display and three digital inputs	
			Doesn't include senors or pressure transmitter	
			Sensors NTC	
	EPP001	SONNTC1,5MPV	Pego 1.5m NTC Sensor	
	EPP002	SONNTC1,5MNANO	Pego 1.5m NTC Sensor for Nano Controllers	
	EPP003	SONNTC3MPV	Pego 3m NTC Sensor	
	EPP006	SONNTC6MPV	Pego 6m NTC Sensor	
	EPP030	SONNTC30MPV	Pego 30m NTC Sensor	
			Pressure Transmitters	
	EPP112	SONOT1012	Pressure Transmitter 0-12 bar, 0-5vdc output	
			1/4" Female Flare connection	
			Humidity Transmitter	
	SHP001		Room Humidity Probe 4-20mA 0-100% RH	
			Man In Coolroom Alarm	
	EP0001	100APE03	PEGO Man In Coolroom Alarm	
			Steam Humifidiers	
	SH0003	ES-3-M-N	Easysteam 3KG Steam Humidifier 230V Single Phase	
	SH006	ES-6-M-N	Easysteam 6KG Steam Humidifier 230V Single Phase	
		400UMFAN100	Fan Deck Unit For 3Kg and 6kg Humidifier	
	SHP003	UMITUBVAPS2	25mm Steam Hose	
			Please note that humidifiers are Indent Only	

Prices and specification may change without notification. All prices are exclusive of GST and freight.

Pego Electrical Panels

	Stock Code	Vendors Code	Description	List Price
			ECP 04 Electrical Boards	
	ECP 04	10004B009	Electrical boards suitable for the control of three-phase condensing units, up to 1-3 HP.	
			Outputs arer 3PH compressor contactor and motor overload with two single phase condensing fans.	
			ECP07 Electrical Boards	
	ECP 07	10007B005	Electrical boards suitable for the control of three-phase condensing units, up to 7 HP.	
			Outputs are 3PH compressor contactor and motor overload with two single phase condensing fans outputs. (800Watts Total)	
			ECP15 Electrical Boards	
	ECP1 15	10015B02	Electrical boards suitable for the control of three-phase condensing units, up to 20 HP.	
			Outputs are 3PH compressor contactor and motor overload with two three phase condensing fan outputs.	
			ECP300 Controller Complete With Electrical Panel	
	EPD030	ECP300 Expert	All In One Control And Safety	
		VD4	Controller & Electrical Board for 3PH Units Up to 4HP Comps	
			Outputs For Defrost Elements Up to 6KW, Evaporator Fans,	
			Condensing Fans Plus Room Light & Alarm Relays	
			Includes 2x Sensors	
	EPD075	ECP300 Expert VD	All In One Control And Safety	
		VD7	Controller & Electrical Board for 3PH Units From 4-7HP	
			Outputs For Defrost Elements Up to 9KW, Evaporator Fans,	
			Condensing Fans Plus Room Light & Alarm Relays	
			Includes 2x Sensors	

Prices and specification may change without notification. All prices are exclusive of GST and freight.

Full Gauge Electronic Refrigeration Controls

	Stock Code	Vendors Code	Description	List Price
			Med Temp Refrigeration Controllers	
	CEMT-512RiL	MT-512RiL Plus	12/24V Med Temp Controller with Passive defrost,1x Sensor and 16A(8) 250v 1HP Relay	
			(One sensor included in box)	
	CEMT-512Ri Plus	MT-512Ri Plus	115/230V Med Temp Controller with Passive defrost, 1x Sensor and 16A(8) 250v 1HP Relay	
			(One sensor included in box)	
			Low Temp Refrigeration Controllers	
	CETC-900Ri Clock	TC-900Ri Clock	115/230V Low Temp Controller with defrost ,2x Sensors,	
			16A(8) 250v 1 HP comp relay. No alarm relay.	
			Real time defrost clock and RS485 Sitrad Interface.	
			(Two sensors included in box)	
TC-900Ri Clock	CETC-900Ri	TC-900Ri	230Vac Low Temp Controller with forced defrost,	
			2x Sensors, 5A(3) 250v 1/8 HP Relays	
			No Alarm Relay. Use TC-940Ri if alarm relay required	
			(Two sensors included in box)	
	CETC-940Ri	TC-940Ri	230Vac Low Temp Controller with forced defrost,	
			2x Sensors, 5A(3) 250v 1/8 HP Relays and with alarm relay	
			(Two sensors included in box)	
	CETC-940RiL Plus	TC-940RiL Plus	12Vdc Low Temp Controller with forced defrost,	
			2x Sensors, 5A(3) 250v 1/8 HP Relays and with alarm relay	
			(Two sensors included in box)	
	CETC-940Ri Plus	TC-940Ri Plus	230V (Transformer included) Low Temp Controller with	
TC-940Ri Plus			forced defrost, 2x Sensors, 5A(3) 250v 1/8 HP Relays	
			with alarm relay and digital input. RS485 Sitrad	
			Communication. (Two sensors included in box)	
	CETC-910Ri	TC-910Ri	230V Low Temp Controller with 2 stages of refrigeration,	
			forced defrost, 2x sensors, 2x 5A(3) Compressor relays.	
TC-910Ri			No Alarm Relay (Two sensors included in box)	
	CETI-33I Plus	TI-33i Plus	230V Thermometer with 3 sensors. RS485 Sitrad Communication.	
TI-33i Plus				
			Pressure Staging Controllers	
	CEPCT-100	PCT-100I	Single Stage Pressure Controller 0-100psi or 0-500 psi	
			C/W Pressure Transducer. 230v Supply	
	CEPCT-410RI PLUS	PCT-410i Plus	Four Stage Pressure Controller 0-100psi or 0-500psi	
			115/230v Supply (Does not include Pressure Transmitter)	

Fullgauge Certifications:-

Prices and specification may change without notification. All prices are exclusive of GST and freight.

Electronic Refrigeration Controls, Sensors

	Stock Code	Vendors Code	Description	List Price
			Airconditioning Controllers	
	CETIC-17RGTI	TIC-17RGTi	230V basic heating or cooling controller. Relay 250V 16A(8)	
	CEMT-518Ri	MT-518Ri	230V 2 x relay output controller Can be configured for	
			2 stage heat, 2 stage cool, or 1 heat-1 cool.	
MT-518Ri/TC-17GTI			Relays 250V 8A(3) 250V	
	CEMT-543RiPLUS	MT 543i Plus	230V 3 x relay output controller. Can configured for 2 heat &	
			1 cool or 2 cool & 1 heat or 3 stages heat or cool.	
			Third output can also configured as an alarm output.	
	CEMT-530 Super	MT-530Super	230V Humidity and Temperature controller with seperate	
			humidity and temperature outputs and a configurable	
			third output.	
			Sensors	
	CESEN025	SB19	2.5 Metre 10K NTC Sensor -50 to 105deg C	
	CESEN050	SB19	5 Metre 10K NTC Sensor -50 to 105deg C	
	CESEN100	SB19	10 Metre 10K NTC Sensor -50 to 105deg C	
	CESB59	SB59	2.5 Metre High Temp 10k NTC Sensor up to 200deg C	
			For use with the TIC-17RGT Controller	
			Pressure Transmitters	
	CESB69-100V	SB69-100V	Pressure Transmitter 0-100psi, 0-5vdc output 1/4" Male Flare	
			1 metre Cable	
	CESB69-500V	SB69-500V	Pressure Transmitter 0-100psi, 0-5vdc output 1/4" Male Flare	
			1 metre Cable	
			Enclosure for MT & TC Controllers	
	CEFGEN1	Enclosure	Enclosure for MT & TC Controllers with two on/off switches.	
	CEFGEN2	Enclosure	Enclosure for MT & TC Controllers without the two on/off switches.	
Enclosure				
	EPBOX	Enclosure	Enclosure for Full Gauge Controller 100 x 100 x 80 c/w cutout	
Comes with cutout				
			Sitrad Supervisory System Components	
	Sitrad	Sitrad Software	Supervisory System software.	
			Download From www.fullgauge.com	
	CEFGWI	FG-WI	Wireless Convertor. Allows connecting a network of controllers	
			to Sitrad supervisory system PC using a RF signal.	
			Connection between the controllers is by means of RS 485 serial Connection.	
	CEFGCONV32	Conv32	RS485 to USB Convertor. Converts the RS485 serial connection from the network of controllers to USB for connection to the PC and the Sitrad Supervisory system.	
FG-WI				

Prices and specification may change without notification. All prices are exclusive of GST and freight.

Ranco Pressure Switches

	Stock Code	Vendors Code	Description	List Price
			Pressure Switches	
	CP0003	016-8706	Ranco LP Pressure Switch, Auto Reset, Range -30 - 700kpa	
			SPDT Contacts	
	CP0002	016-8713	Ranco LP Switch, Auto Reset, Range -30 - 700kpa	
			With 1m Capillary and Flare Nut	
			SPDT Contacts	
	CP0012	016-8750	Ranco HP Pressure Switch, Auto Reset, Range 690kpa - 3000kpa	
			SPDT Contacts	
	CP0013	016-8751	Ranco HP Pressure Switch, Man Reset, Range 690kpa - 3000kpa	
			SPDT Contacts	
	CP0024	016-8701	Ranco Dual pressure LP/HP Pressure Switch, Auto Reset	
			LP Range -30KPA - 700KPA	
			HP Range 690kpa - 3000kpa	
			SPDT Contacts	
	CP0023	017-8705	Ranco Dual pressure LP/HP Pressure Switch, Man Reset on HP	
			LP Range -30KPA - 700KPA	
			HP Range 690kpa - 3000kpa Man Reset	
			SPDT Contacts	
	CP0022	017-8711	Ranco Dual pressure LP/HP Pressure Switch, Auto Reset	
			LP Range -30KPA - 700KPA	
			HP Range 690kpa - 3000kpa	
			With 1m Capillary's and Flare Nuts	
			SPDT Contacts	
			Pressure Switch Brackets & Covers	
	CPANG	31696-1	Ranco Angle Bracket	
	CTFLAT	48129-3	Ranco Flat Mounting Bracket	
	CPCOVERS	3600254004	Single Pressure Switch Cover	
	CPCOVERD	3600253006	Dual Pressure Switch Cover	
			Oil Failure Switches	
	CP0051	P30-3701-70	Ranco Oil Differential Pressure Oil Failure Switch	
			Range 0.3 - 4bar Man Reset	
			Time Delay 90 Seconds	
	CP0050	P30-3601-070	Ranco Oil Differential Pressure Oil Failure Switch	
			Range 0.3 - 4bar Man Reset	
			Time Delay 60 Seconds	
	CP0052	P30-3801-80	Ranco Oil Differential Pressure Oil Failure Switch	
			Range 0.3 - 4bar Man Reset	
			Time Delay 120 Seconds	

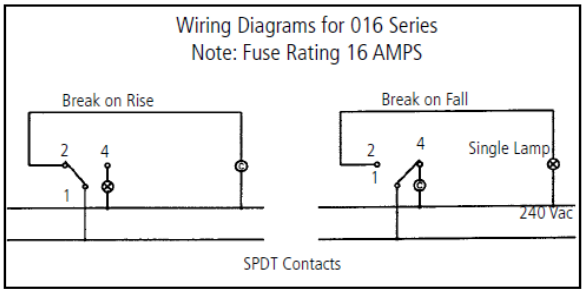

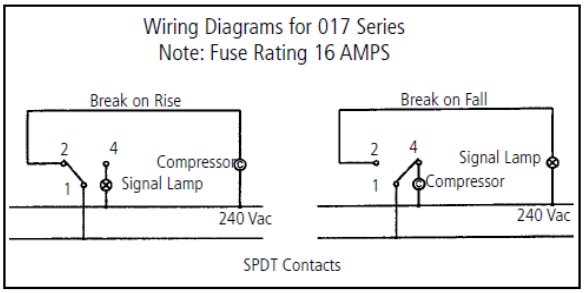

Prices and specification may change without notification. All prices are exclusive of GST and freight.

Ranco Thermostats

Stock Code	Vendors Code	Description	List Price
Thermostats Domestic			
CT0101	VC-1	Single Temp Cabinet Thermostat	
CT0102	VA-2	Absorption Cabinet Thermostat	
CT0103	VF-3	Freezer Thermostat	
CT0104	VP-4	Push Button Defrost Thermostat	
CT0106	VR-6	Freezer Signal Thermostat	
CT0107	VB-7	Bottle Cabinet Thermostat	
CT0108	VW-8	Window Airconditioner Thermostat	
CT0109	VT-9	Dual Temperature Thermostat	
Commercial Thermostats			
CT0010	016-6950	Ranco Thermostat -35°C to-7°C, 2m Capillary, Coiled SPDT Contacts	
CT0011	016-6951	Ranco Thermostat -18°C to +13°C, 2m Capillary, Coiled SPDT Contacts	
CT0012	016-6954	Ranco Thermostat -5°C to +25°C, 2m Capillary, Coiled SPDT Contacts	
CT0013	016-6924-101	Ranco Thermostat -5°C to +25°C, 2m Capillary, Straight SPDT Contacts	
CT0014	016-6980	Ranco Thermostat -18°C to +13°C, 2m Capillary, Cross Ambient Bulb SPDT Contacts	
CT0015	016-6981	Ranco Thermostat -5°C to +25°C, 2m Capillary, Cross Ambient Bulb SPDT Contacts	
CT0016	016-6983	Ranco Thermostat +10°C to +40°C, 2m Capillary, Cross Ambient Bulb SPDT Contacts	
CT0017	018-1100	Ranco Ice Thermostat 0°C, 2m Capillary With Bulb SPDT Contacts	

Part No.	Application	Cold Out °C	Cold In °C	Warm Out °C	Warm In °C	Defrost Term. °C	Signal Op. °C	Cap. Length mm
VC 1	Compressor Refrig.	-23	-14.5		2			1200
VA 2	Electric Absorption Refrigerator	-18	-14.5		3.5			2000
VF 3	Freezer and Ice Cream Cabinet	-34		-16.5	-12			2000
VP 4	Push Button Compressor Refrig.	-25		-10.4	-4	5.5		1200
VS 5	Freezer with Standard Signal	-34		-16.5	-12		Cut-In 5 Above Cut-In	2000
VR 6	Freezer with Reverse Signal	-34		-16.5	-12		Cut-Out 5 Above Cut-In	2000
VB 7	Bottle or Beverage Cooler	-3	2		12.5			1200
VW 8	Window Air Conditioner	15	18		34			1200
VT 9	Two Temperature Refrigerator	-26		-11		3.5 Con. Cut-In		1200
VX 0	Refrigerator Forced Draft Coil	-15		-5				1500

Prices and specification may change without notification. All prices are exclusive of GST and freight.

Danfoss Pressure Switches/Thermostats; Thermometer

	Stock Code	Vendors Code	Description	List Price
			Pressure Switches	
	CP0P6E	P6E	Fenshen LP Switch, Auto Reset Range -50kpa - 500kpa	
			SPDT Contacts	
	CP0P30E	P30E	Fenshen HP Switch ,Auto Reset Range 500kpa - 3000kpa	
			SPDT Contacts	
	CP0P30ME	P30ME	Fenshen HP Switch ,Man Reset Range 500kpa - 3000kpa	
			SPDT Contacts	
	CP0P830E	P830E	Fenshen Dual pressure LP/HP Pressure Switch, Auto Reset	
			LP Range 70kpa - 600kpa	
			HP Range 500kpa - 3000kpa	
			SPDT Contacts	
	CP0P830HME	P830HME	Fenshen Dual pressure LP/HP Pressure Switch, Man Reset on HP	
			LP 70kpa - 0600kpa, Auto. Reset	
			HP Range 500kpa - 3000kpa ,Man. Reset	
			SPDT Contacts	
			Pressure Switches	
	CP0001	060-110166	Danfoss KP1 LP Switch, Auto Reset Range -20kpa -750kpa	
			SPDT Contacts	
	CP0010	060-117166	Danfoss KP5 HP Switch, Auto Reset Range 800kpa - 3200kpa	
			SPDT Contacts	
	CP0011	060-117366	Danfoss KP5 HP Switch Man Reset Range 800kpa - 3200kpa	
			SPDT Contacts	
	CP0020	060-12466	Danfoss KP15 HP/LP Switch Manual Reset.	
			LP Range - 20kpa - 750kpa	
			HP Range 800kpa - 3200kpa	
			2 SPST(NC) Contacts	
	CP0021	060-115466	Danfoss KP15 Dual Pressure HP/LP Pressure Switch Man Reset on HP	
			LP Range 20kpa -750kpa	
			HP Range 800kpa - 3200kpa Man Reset	
			SPDT+SPST(NO)	
			Thermostats	
	CT0001	060L110066	Danfoss KP61 Thermostat -30°C +15°C 2m Capillary Straight	
			SPDT Contacts	
	CT0002	060L111266	Danfoss KP69 Thermostat -5°C +35°C 2m Capillary Coiled Sensor	
			SPDT Contacts	
	CT0003	060L111366	Danfoss KP71 Thermostat -5°C +20°C 2m Capillary Tube Sensor	
			SPDT Contacts	
	CT0004	060L114366	Danfoss KP73 Thermostat -25°C +15°C 2m Capillary Tube Sensor	
			SPDT Contacts	
			Dial Thermometer	
	DT0100		Dial Thermometer 100mm -40º -- +40ºC. 3m Capillary with optional	
			rear or bottom entry. Black ABS case for face or rear mounting	

Prices and specification may change without notification. All prices are exclusive of GST and freight.

Errecinque Plastic Capillary Hoses

	Stock Code	Vendors Code	Description	List Price
			Capillary Plastic Hose	**Per Metre**
	PT002AZ	070/01.50-AZ	ERRECINQUE Blue Tube 2mm	
	PT002B	070/01.50	ERRECINQUE Black Tube 2mm	
	PT002R	070/01.50-RED	ERRECINQUE Red Tube 2mm	
	PT004B	070/03.50	ERRECINQUE Black Tube 4mm	
	PT0009	070/07.5	ERRECINQUE Black Tube 3/8"	
			Crimp Fittings	
	PTRF0001	RF0001	ERRECINQUE Female Straight Fitting 1/4" Flare 2mm Hose	
	PTRF0002	RF0002	ERRECINQUE Female Straight Fitting 1/4" Flare w/Depressor 2mm Hose	
	PTRFV437	RFV437	ERRECINQUE Female Straight Fitting 1/4" Flare w/Depressor 4mm Hose	
	PTRF0011	RF0011	ERRECINQUE Female 90 Deg Elbow 1/4" Flare 2mm Hose	
	PTRF0012	RF0012	ERRECINQUE Brass Crimp Tee 2mm	
	PTRF0114	RF0114	ERRECINQUE Brass Nut 1/4" Flare 2mm	
	PTRF0117	RF0117	ERRECINQUE Tee Central Nut 1/4" Flare Short 2mm	
	PTRF0118	RF0118	ERRECINQUE Tee Lateral Nut 1/4" Flare Short 2mm	
	PTRFV010	RFV010	ERRECINQUE Female Straight Fitting 1/4" Flare 4mm Hose	
	PTRFV241	RFV241	ERRECINQUE Female Long Straight Fitting 1/4" Flare 4mm Hose	
	PTRFV115	RFV115	ERRECINQUE Female 90 Deg Elbow 1/4" Flare 4mm Hose	
	PTRF0008	RF0008	ERRECINQUE Aluminium Sleeve 2mm & 4mm Hose	
	PTRFY073	RFY073	ERRECINQUE Female Straight Fitting 3/8" Flare 3/8" Hose	
	PTRFY077	RFY077	ERRECINQUE Female 90 Deg Elbow 3/8" Flare 3/8" Hose	
	PTRFY468	RFY468	ERRECINQUE Male Straight Fitting 3/8" Flare 3/8" Hose	
			Accesssories	
	PTRFAT01	RFAT01	ERRECINQUE Crimping Tool 2mm	
	PTRFAT03	RFAT03	ERRECINQUE Suit Case	
	PTRFC007	RFC007	ERRECINQUE Depressors 2 & 4mm	
	BFG006	7580/2	Copper Gaskets 2 & 4mm	
			Copper Capillary Connectors	
	CPCAPIL		Copper Pressure Control Capillary Connector	

Prices and specification may change without notification. All prices are exclusive of GST and freight.

Airconditioning Thermostats

	Stock Code	Vendors Code	Description	List Price
			Basic Room Thermostat	
	CR0020	RAA20	Basic Electromechanical Room Thermostat For Heating Only/	
			Setting Range 8…30C With Lockable Knob.	
			AC 24v-250v 0 .2-6 Switch Contacts Amp Contacts	
	CR0030	RAA30	Basic Electromechanical Room Thermostat Heating Only/ Cooling Only With On/Off Switch	
			Setting Range 8…30C With Lockable Knob.	
			AC 24v-250v 0 .2-6 Switch Contacts Amp Contacts	
	CT0150	VRS-C234Q149	Saginomiya Room Thermostat Two Stage Auto Change Over Screwdriver Adjustment Range 10 to 35°C Differential 1.5°C Fixed Between stages 2°C Fixed	
	CT0152	VRS-C234Q172	Saginomiya Room Thermostat Two Stage Auto Change Over . ON/OFF Switch Range 10 to 35°C Differential 1.5°C Fixed. Between stages 2°C Fixed	
			Electronic Heat Pump Room Thermostat	
	CR1100	RGD1100	Programmable Electronic Room Thermostat for Heat Pumps	
			and Fan Coils. With display and 230v 5amp Relays.	
	CRQ11	QAH11/AP	Remote Cable Sensor For RGD110	
	CRQ32	QAA32	Remote Sensor In Room Housing For RGD110	
			Airconditioning Controllers	
	CETIC-17RGTI	TIC-17RGTi	230V basic heating or cooling controller. Relay 250V 16A(8)	
	CEMT-518Ri	MT-518Ri	230V 2 x relay output controller Can be configured for	
			2 stage heat, 2 stage cool, or 1 heat-1 cool.	
MT-518Ri/TC-17GTI			Relays 250V 8A(3) 250V	
	CEMT-530 Super	MT-530Super	230V Humidity and Temperature controller with seperate	
			humidity and temperature outputs and a configurable	
			third output.	

Prices and specification may change without notification. All prices are exclusive of GST and freight.

Defrost Controls

	Stock Code	Vendors Code	Description	List Price
			Paragon Defrost Controls	
	CP0100	8145-21	Time Initiated, Externally Temp or Pressure Terminated Externally.	
			1-6 Defrosts per 24 Hours & 4 Hours Between Defrosts Minimum	
			SPDT 250V 25 amp 2 HP Contacts	
	CP0102	8045-21	Time Initiated, Time Terminated	
			1-6 Defrosts per 24 Hours & 3 Hours Between Defrosts Minimum	
			SPDT 250V 25 amp 2 HP Contacts	
	CP0103	632-21	Time Initiated, Time Terminated With Fan Delay	
			1-8 Defrosts per 24 Hours & 4 Hours Between Defrosts Minimum	
			SPDT 250V 10 amp Contacts	
	CP0104	8245-21	Time Initiated, Pressure Terminated	
			1-8 Defrosts per 24 Hours & 4 Hours Between Defrosts Minimum	
			Adjustable End Defrost Pressure 36-110 psi	
			SPDT 250V 10 amp Contacts	

Prices and specification may change without notification. All prices are exclusive of GST and freight.

Fans,Motors,Blades

	Stock Code	Vendors Code	Description		List Price
			External Rotor Fans		
	FE0200		200mm External Rotor Fan 220V 50HZ		
	FE0250		250mm External Rotor Fan 220V 50HZ		
	FE0300		300mm External Rotor Fan 220V 50HZ		
	FE0350		350mm External Rotor Fan 220V 50HZ		
	FE0400		400mm External Rotor Fan 220V 50HZ		
	FE0450		450mm External Rotor Fan 220V 50HZ		
	FE0500		500mm - 520w External Rotor Fan 220V 50HZ		
	FE0630		630mm External Rotor Fan 3Ph		
	FE1300		300mm Ext Fan Blower 220V 50HZ		
	FE1500		500mm External Rotor Fan 3Ph		
	FE1600		600mm External Rotor Fan 3Ph		
	FE2300		300mm External Rotor Fan 3Ph		
	FE2630		630mm External Rotor Fan 220V 50HZ		
	FEE300		Dunli 300mm EC External Rotor Fan Assembly		
			Electrically Commutated: 0-10VDC/PWM Control		
			Fan Motors		
	FS0001	SM-672	Universal Motor Kit 5w c/w blades		
	FS0005	5W	5W Fan Motor Henry		
	FS0007	7W	7W Fan Motor Saiwei		
	FS0010	10W	10W Fan Motor Saiwei		
	FS0016	16W	16W Fan Motor Saiwei		
	FS0025	25W	25W Fan Motor Saiwei		
	FS0034	34W	34W Fan Motor Saiwei		
	FWD012	ECR01B0521	Wellington 12W ECR01 Fan Motor 1300rpm with speed control & timed reverse		
	FWD020	ECR01B0193	Wellington 20W ECR01 Fan Motor 1300rpm with speed control & timed reverse		
			Fan Blades		
	FB0170	Φ170FAN	170mm Fan Blade		
	FB0200	Φ200FAN	200mm Fan Blade		
	FB0230	Φ230FAN	230mm Fan Blade		
	FB0250	Φ250FAN	250mm Fan Blade		
	FB0300	Φ300FAN	300mm Fan Blade		
			Brackets		
	FA0072	H72BRACKET	Bracket H72mm		
	FA0084	H84BRACKET	Bracket H84mm		
	FA0109	H109BRACKET	Bracket H107mm		
			Grille Mount		
	FAG170	Φ170GRID	170mm Grille Mount		
	FAG200	Φ200GRID	200mm Grille Mount		
	FAG230	Φ230GRID	230mm Grille Mount		
	FAG250	Φ250GRID	250mm Grille Mount		
	FAG300	Φ300GRID	300mm Grille Mount		
			Ring Mount		
	FAR170	Φ170RING	170mm Ring Mount		
	FAR200	Φ200RING	200mm Ring Mount		
	FAR230	Φ230RING	230mm Ring Mount		
	FAR250	Φ250RING	250mm Ring Mount		

Wiring for External Rotor Motors

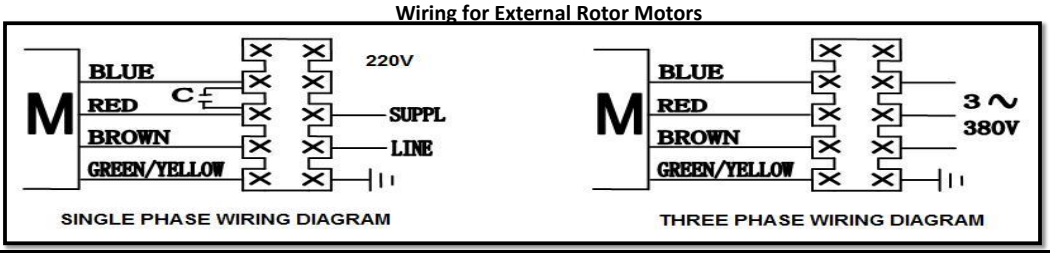

Prices and specification may change without notification. All prices are exclusive of GST and freight.

Brass Fittings, Nuts, Unions

	Stock Code	Vendors Code	Description	List Price
Flare Nuts				
	BF0006	7010/22	Flare Nut 1/4"	
	BF0008		Flare Nut 5/16	
	BF0009	7010/33	Flare Nut 3/8"	
	BF0012	7010/44	Flare Nut 1/2"	
	BF0016	7010/55	Flare Nut 5/8"	
	BF0019	7010/66	Flare Nut 3/4"	
	BF0022	7010/77	Flare Nut 7/8"	
	BF1006	7020/20	Flare Cap Nut 1/4"	
	BF1008		Flare Cap Nut 5/16"	
Flare Swivel Unions				
	BF2006	7050/2	Flare Swivel Unions 1/4"	
	BF2009	7050/3	Flare Swivel Unions 3/8"	
	BF2012	7050/4	Flare Swivel Unions 1/2"	
	BF2016	7050/5	Flare Swivel Unions 5/8"	
Flare Unions				
	BF3006	7110/2	Flare Union 1/4"	
	BF3008		Flare Union 5/16	
	BF3009	7110/3	Flare Union 3/8"	
	BF3012	7110/4	Flare Union 1/2"	
	BF3016	7110/5	Flare Union 5/8"	
	BF3019	7110/6	Flare Union 3/4"	
Flare- NPT Unions				
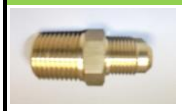	BF4006	7130/2	Flare - NPT Union 1/4" x 1/4"	
	BF4008		Flare Union 5/16 x 1/8 NPT	
	BF4108		Flare Union 5/16 x 1/4 NPT	
	BF4009	7130/3	Flare - NPT Union 3/8" x 3/8"	
	BF4012	7130/4	Flare - NPT Union 1/2" x 1/2"	

Prices and specification may change without notification. All prices are exclusive of GST and freight.

Brass Fittings, Unions, Access Ports

	Stock Code	Vendors Code	Description	List Price
			Flare Plugs	
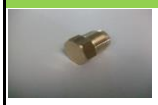	BFA006	7510/2	Flare Plug 1/4"	
	BFA009	7510/3	Flare Plug 3/8"	
	BFA012	7510/4	Flare Plug 1/2"	
			Flare Bonnets	
	BFB006	7560/2	Flare Bonnet 1/4"	
	BFB008		Flare Bonnet 5/16"	
	BFB009	7560/3	Flare Bonnet 3/8"	
	BFB012	7560/4	Flare Bonnet 1/2"	
	BFB016	7560/5	Flare Bonnet 5/8"	
	BFB019	7560/6	Flare Bonnet 3/4"	
			Pipe Plug NPT	
	BFD003	7520/1	Pipe Plug NPT 1/8"	
	BFD006	7520/2	Pipe Plug NPT 1/4"	
	BFD009	7520/3	Pipe Plug NPT 3/8"	
	BFD012	7520/4	Pipe Plug NPT 1/2"	
			Male/Female Flare Reducing Union	
	BFF0609	7150/23	Male/Female Flare Reducing Union 1/4" x 3/8"	
	BFF0612	7150/24	Male/Female Flare Reducing Union 1/4" x 1/2"	
	BFF0906	7150/32	Male/Female Flare Reducing Union 3/8" x 1/4"	
	BFF0912	7150/34	Male/Female Flare Reducing Union 3/8" x 1/2"	
	BFF1209	7150/43	Male/Female Flare Reducing Union 1/2" x 3/8"	
	BFF1216	7150/45	Male/Female Flare Reducing Union 1/2" x 5/8"	
	BFF1612	7150/54	Male/Female Flare Reducing Union 5/8" x 1/2"	
			Flare Gaskets	
	BFG006	7580/2	Flare Gasket 1/4"	
	BFG008		Flare Gasket 5/16	
	BFG009	7580/3	Flare Gasket 3/8"	
	BFG012	7580/4	Flare Gasket 1/2"	
	BFG016	7580/5	Flare Gasket 5/8"	
	BFG019	7580/6	Flare Gasket 3/4"	
			Flare - NPT Reducing Unions	
	BFN0603	7140/21	Flare - NPT Reducing Union 1/4" x 1/8"	
	BFN0906	7140/32	Flare - NPT Reducing Union 3/8" x 1/4"	
	BFN0912	7140/34	Flare - NPT Reducing Union 3/8" x 1/2"	
	BFN1209	7140/43	Flare - NPT Reducing Union 1/2" x 3/8"	
	BFN1612	7140/54	Flare - NPT Reducing Union 5/8" x 1/2"	
			Reducing Flare Unions	
	BFR0609	7120/23	Reducing Flare Union 1/4" x 3/8"	
	BFR0612	7120/24	Reducing Flare Union 1/4" x 1/2"	
	BFR0912	7120/34	Reducing Flare Union 3/8" x 1/2"	
	BFR0916	7120/35	Reducing Flare Union 3/8" x 5/8"	
	BFR1216	7120/45	Reducing Flare Union 1/2" x 5/8"	
	BFR1219	7120/46	Reducing Flare Union 1/2" x 3/4"	
	BFR1619	7120/56	Reducing Flare Union 5/8" x 3/4"	
			Access Ports, etc	
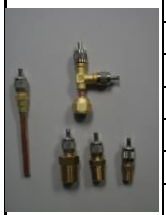	VM0006	8350/X03	Access Port 1/4" Sweat with 60mm Tail	
	VM1006	8351/X04	Access Port 1/4" Sweat	
	VM1008	8351/X05	Access Port 5/16" Sweat	
	VM2003	8354/21	Access Port 1/8" NPT	
	VM2006	8354/22	Access Port 1/4" NPT	
	VM2009	8354/23	Access Port 3/8" NPT	
	VM3006	8380/X06	Access Tee 1/4" Schrader	
	VS6006	9900/X58	Flare/ODS Adapter - 1/4" Nut	
	VS6007	9900/X62	Flare/ODS Adapter - 1/4" Stem	

Prices and specification may change without notification. All prices are exclusive of GST and freight.

Brass Fittings, Elbows, Tees

	Stock Code	Vendors Code	Description	List Price
Cylinder adaptors				
	BF5006	7154/2	Cylinder Adaptor 1/4" x 1/2" FPT RH	
	BF6006	7156/2	Cylinder Adaptor 1/4" x 1/2" FPT LH	
Flare Elbows				
	BF7006	7210/2	Flare Elbow 1/4"	
	BF7009	7210/3	Flare Elbow 3/8"	
	BF7012	7210/4	Flare Elbow 1/2"	
	BF7016	7210/5	Flare Elbow 5/8"	
Flare-NPT Elbows				
	BF8006	7220/2	Flare - NPT Elbow 1/4" x 1/4"	
	BF8009	7220/3	Flare - NPT Elbow 3/8" x 3/8"	
	BF8012	7220/4	Flare - NPT Elbow 1/2" x 1/2"	
	BF8019	7220/6	Flare - NPT Elbow 3/4" x 3/4"	
	Flare Tees			
	BF9006	7310/2	Flare Tee 1/4"	
	BF9009	7310/3	Flare Tee 3/8"	
	BF9012	7310/4	Flare Tee 1/2"	
	BF9016	7310/5	Flare Tee 5/8"	
	BF9019	7310/6	Flare Tee 3/4"	
Heldon Safety Plugs				
	BFSPA	SP-A	Safety Plug, Acetylene Cylinder	
	BFSPO	SP-O	Safety Plug, Oxygen Cylinder	

Prices and specification may change without notification. All prices are exclusive of GST and freight.

Copper Fittings, 45's 90's, Tees, Couplings

	Stock Code	Vendors Code	Description	List Price
			Elbow	
	CFB0009		3/8" x 45 Deg Copper Bend	
	CFB0012		1/2" X 45 Deg Copper Bend	
	CFB0016		5/8" X 45 Deg Copper Elbow	
	CFB0019		3/4" X 45 Deg Copper Elbow	
	CFB0022		7/8" X 45 Deg Copper Elbow	
	CFB0028		1.1/8" X 45 Deg Copper Elbow	
	CFB0035		1.3/8" X 45 Deg Copper Elbow	
	CFB0042		1.5/8" X 45 Deg Copper Elbow	
	CFB0054		2.1/8" X 45 Deg Copper Elbow	
	CFB0067		2.5/8" X 45 Deg Copper Bend	
			Short Radius Elbow	
	CFES0006		1/4" X 90 Deg Copper Elbow Short Radius	
	CFES0009		3/8" X 90 Deg Copper Elbow Short Radius	
	CFES0012		1/2" X 90 Deg Copper Elbow Short Radius	
	CFES0016		5/8" X 90 Deg Copper Elbow Short Radius	
	CFES0019		3/4" X 90 Deg Copper Elbow Short Radius	
	CFES0022		7/8" X 90 Deg Copper Elbow Short Radius	
	CFES0028		1.1/8" X 90 Deg Copper Elbow Short Radius	
	CFES0035		1.3/8" X 90 Deg Copper Elbow Short Radius	
	CFES0042		1.5/8" X 90 Deg Copper Elbow Short Radius	
	CFES0054		2.1/8" X 90 Deg Copper Elbow Short Radius	
	CFES0067		2.5/8" X 90 Deg Copper Elbow Short Radius	
	CFES0080		3.1/8" X 90 Deg Copper Elbow Short Radius	
			Return Bends	
	CFD0009		3/8" X 180 Deg Copper Return Bend	
	CFD0012		1/2" X 180 Deg Copper Return Bend	
	CFD0016		5/8" X 180 Deg Copper Return Bend	
	CFD0019		3/4" X 180 Deg Copper Return Bend	
	CFD0022		7/8" X 180 Deg Copper Return Bend	
			Tee	
	CFT0006		1/4" Copper Tee	
	CFT0009		3/8" Copper Tee	
	CFT0012		1/2" Copper Tee	
	CFT0016		5/8" Copper Tee	
	CFT0019		3/4" Copper Tee	
	CFT0022		7/8" Copper Tee	
	CFT0028		1.1/8" Copper Tee	
	CFT0035		1.3/8" Copper Tee	
	CFT0042		1.5/8" Copper Tee	
	CFT0054		2.1/8" Copper Tee	
	CFT0067		2.5/8 Copper Tee	
	CFT0080		3.1/8 Copper Tee	
			Reducing Tee	
	CFRT0906		3/8" x 1/4" Reducing Tee	
	CFRT1206		1/2" x 1/4" Reducing Tee	
	CFRT1209		1/2" x 3/8" Reducing Tee	
	CFRT1609		5/8" x 3/8" Reducing Tee	
	CFRT1909		3/4" x 3/8" Reducing Tee	
			Long Radius Elbows	
	CFEL0009		3/8" 90 Deg Copper Elbow Long Radius	
	CFEL0012		1/2" X 90 Deg Copper Elbow Long Radius	
	CFEL0016		5/8" X 90 Deg Copper Elbow Long Radius	
	CFEL0019		3/4" X 90 Deg Copper Elbow Long Radius	
	CFEL0022		7/8" X 90 Deg Copper Elbow Long Radius	
	CFEL0028		1.1/8" X 90 Deg Copper Elbow Long Radius	
	CFEL0035		1.3/8" X 90 Deg Copper Elbow Long Radius	
	CFEL0042		1.5/8" X 90 Deg Copper Elbow Long Radius	
	CFEL0054		2.1/8" X 90 Deg Copper Elbow Long Radius	
	CFEL0067		2.5/8 X 90 Deg Copper Elbow Long Radius	
	CFEL0080		3.1/8 X 90 Deg Copper Elbow Long Radius	
			Couplings	
	CFC0006		1/4 Copper Coupling	
	CFC0009		3/8" Copper Coupling	
	CFC0012		1/2" Copper Coupling	
	CFC0016		5/8" Copper Coupling	
	CFC0019		3/4" Copper Coupling	
	CFC0022		7/8" Copper Coupling	
	CFC0028		1.1/8" Copper Coupling	
	CFC0035		1.3/8" Copper Coupling	
	CFC0042		1.5/8" Copper Coupling	
	CFC0054		2.1/8" Copper Coupling	
	CFC0067		2.5/8 Copper Coupling	
	CFC0080		3.1/8 Copper Coupling	

Prices and specification may change without notification. All prices are exclusive of GST and freight.

Copper Fittings, Reducers, Caps, P-Traps

	Stock Code	Vendors Code	Description	List Price
			Reducing Bushes	
	CFRB0906		3/8" - 1/4" Reducing Bush	
	CFRB1209		1/2" - 3/8" Reducing Bush	
	CFRB1609		5/8" - 3/8" Reducing Bush	
	CFRB1612		5/8" - 1/2" Reducing Bush	
	CFRB1909		3/4" - 3/8" Reducing Bush	
	CFRB1912		3/4" - 1/2" Reducing Bush	
	CFRB1916		3/4" - 5/8" Reducing Bush	
	CFRB2212		7/8" - 1/2" Reducing Bush	
	CFRB2216		7/8" - 5/8" Reducing Bush	
	CFRB2219		7/8" - 3/4" Reducing Bush	
	CFRB2816		1.1/8" - 5/8" Reducing Bush	
	CFRB2819		1.1/8" - 3/4" Reducing Bush	
	CFRB2822		1.1/8" - 7/8 Reducing Bush	
	CFRB3528		1.3/8" - 1.1/8" Reducing Bush	
	CFRB3522		1.3/8" - 7/8" Reducing Bush	
	CFRB4222		1.5/8" - 7/8" Reducing Bush	
	CFRB4228		1.5/8" - 1.1/8" Reducing Bush	
	CFRB4235		1.5/8" - 1.3/8" Reducing Bush	
	CFRB5442		2.1/8" - 1.5/8" Reducing Bush	
	CFRB5435		2.1/8" - 1.3/8" Reducing Bush	
	CFRB6754		2.5/8" - 2.1/8" Reducing Bush	
	CFRB8054		3.1/8 - 2.1/8 Reducing Bush	
	CFRB8067		3.1/8 - 2.5/8 Reducing Bush	
			Reducing Couplings	
	CFRC0906		3/8" - 1/4" Reducing Coupling	
	CFRC1916		3/4" - 5/8" Reducing Coupling	
	CFRC2216		7/8" - 5/8" Reducing Coupling	
	CFRC2212		7/8" - 1/2" Reducing Coupling	
	CFRC2816		1.1/8" - 5/8" Reducing Coupling	
	CFRC2822		1.1/8" - 7/8 Reducing Coupling	
	CFRC2819		1.1/8" - 3/4" Reducing Coupling	
	CFRC3528		1.3/8"-1.1/8" Reducing Coupling	
	CFRC3522		1.3/8" - 7/8" Reducing Coupling	
	CFRC4235		1.5/8"-1.3/8" Reducing Coupling	
	CFRC4228		1.5/8"-1.1/8" Reducing Coupling	
	CFRC5442		2.1/8"-1.5/8" Reducing Coupling	
	CFRC5435		2.1/8"-1.3/8" Reducing Coupling	
	CFRC6754		2.5/8"-2.1/8" Reducing Coupling	
			Tube Caps	
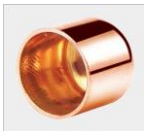	CFS0022		7/8" OD Tube Cap	
	CFS0028		1-1/8" OD Tube Cap	
	CFS0035		1-3/8" OD Tube Cap	
	CFS0042		1-5/8" OD Tube Cap	
	CFS0054		2-1/8" OD Tube Cap	
	CFS0067		2-5/8" OD Tube Cap	
	CFS0080		3-1/8" OD Tube Cap	
			P-Traps	
	CFP0016		5/8" Copper P-Trap	
	CFP0019		3/4" Copper P-Trap	
	CFP0022		7/8" Copper P-Trap	
	CFP0028		1.1/8" Copper P-Trap	
	CFP0035		1.3/8 Copper P-Trap	
	CFP0042		1.5/8 Copper P-Trap	
	CFP0054		2.1/8 Copper P-Trap	

Prices and specification may change without notification. All prices are exclusive of GST and freight.

Copper Fittings, R410a

			Elbows Long Radius R410A	
	CFEL4022		7/8" 90 Deg Copper Elbow Long Radius R410A	
	CFEL4028		1.1/8" 90 Deg Copper Elbow Long Radius R410A	
	CFEL4035		1.3/8" 90 Deg Copper Elbow Long Radius R410A	
	CFEL4042		1.5/8" 90 Deg Copper Elbow Long Radius R410A	
			Elbows 45 deg 410A	
	CFB4028		1.1/8" 45 Deg Copper Elbow R410A	
	CFB4035		1.3/8" 45 Deg Copper Elbow R410A	
	CFB4042		1.5/8" 45 Deg Copper Elbow R410A	
			Couplings R410a	
	CFC4028		1.1/8" Copper Coupling R410A	
	CFC4035		1.3/8" Copper Coupling R410A	
	CFC4042		1.5/8" Copper Coupling R410A	
			Copper Tee - R410A	
	CFT4028		1.1/8 Copper Tee R410a	
	CFT4035		1.3/8 Copper Tee R410a	
	CFT4042		1.5/8 Copper Tee R410a	
			Copper Tee - CO2	
	CFT4016		5/8 Copper Tee - CO2	
	CFT4019		3/4 Copper Tee - CO2	
	CFT4022		7/8 Copper Tee - CO2	
			Couplings - CO2	
	CFC4016		5/8 Coupling - CO2	
	CFC4019		3/4 Coupling - CO2	
	CFC4022		7/8 Coupling - CO2	
			45 Deg Bend - CO2	
	CFB4016		5/8 x 45 Deg Bend - CO2	
	CFB4019		3/4 x 45 Deg Bend - CO2	
	CFB4022		7/8 x 45 Deg Bend - CO2	
			Long Radius Elbows - CO2	
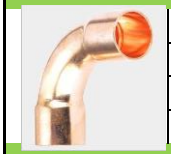	CFEL4016		5/8" X 90 Deg Copper Elbow Long Radius - CO2	
	CFEL4019		3/4" X 90 Deg Copper Elbow Long Radius - CO2	
			Male/Female Elbows	
	CFMF0019		3/4 Copper M/F 90 Deg Elbow	
	CFMF0022		7/8 Copper M/F 90 Deg Elbow	
	CFMF0028		1.1/8 Copper M/F 90 Deg Elbow	
	CFMF0035		1.3/8 Copper M/F 90 Deg Elbow	
	CFMF0042		1.5/8 Copper M/F 90 Deg Elbow	
	CFMF0054		2.1/8 Copper M/F 90 Deg Elbow	
			Copper Saddles	
	CFCS0006		1/4 Copper Pipe Saddle	
	CFCS0009		3/8 Copper Pipe Saddle	
	CFCS0012		1/2 Copper Pipe Saddle	
	CFCS0016		5/8 Copper Pipe Saddle	
	CFCS0019		3/4 Copper Pipe Saddle	
	CFCS0022		7/8 Copper Pipe Saddle	

Prices and specification may change without notification. All prices are exclusive of GST and freight.

Copper Tube

	Stock Code	Vendors Code	Description	Wall Thkness	List Price
			Pre-Insulated Pair Coil		Net price per coil
	PC0609		1/4" x 3/8" Pair Coil 20m	0.8/ 0.8 mm	
	PC0612		1/4" x 1/2" Pair Coil 20m	0.8/ 0.8 mm	
	PC0616		1/4" x 5/8" Pair Coil 20m	0.8/1.00 mm	
	PC0916		3/8" x 5/8" Pair Coil 20m	0.8/1.00 mm	
	PC0919		3/8" x 3/4" Pair Coil 20m	0.8/1.20 mm	
	PCA609	CAT-PIPE	1/4" x 3/8" Pair Coil 20m Aluminium Tube	1.0/1.0 mm	
			Soft Drawn Tube		per coil
	SD0006		1/4 " Soft Drawn Tube 50' Coil	.76 mm	
	SD0008		5/16" Soft Drawn Tube 50' Coil	.81 mm	
	SD0009		3/8 " Soft Drawn Tube 50' Coil	.81 mm	
	SD0012		1/2" Soft Drawn Tube 50' Coil	.81 mm	
	SD0016		5/8" Soft Drawn Tube 50' Coil	.89 mm	
	SD0019		3/4" Soft Drawn Tube 50' Coil	.89 mm	
	SD0022		7/8" Soft Drawn Tube 50' Coil	1.14 mm	
			Hard Drawn Tube		per length
	HD0009		3/8" Hard Drawn Tube 5.8M Length	0.76 mm	
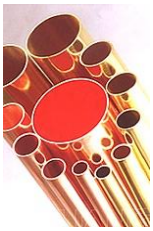	HD0012		1/2" Hard Drawn Tube 5.8M Length	0.89 mm	
	HD0016		5/8" Hard Drawn Tube 5.8M Length	1.02 mm	
	HD0019		3/4" Hard Drawn Tube 5.8M Length	1.07 mm	
	HD0022		7/8" Hard Drawn Tube 5.8M Length	1.14 mm	
	HD0028		1-1/8" Hard Drawn Tube 5.8M Length	1.27 mm	
	HD0035		1-3/8" Hard Drawn Tube 5.8M Length	1.40 mm	
	HD0042		1-5/8" Hard Drawn Tube 5.8M Length	1.52 mm	
	HD0054		2-1/8" Hard Drawn Tube 5.8M Length	1.78 mm	
	HD0067		2-5/8" Hard Drawn Tube 5.8M Length	2.03 mm	
	HD0080		3-1/8" Hard Drawn Tube 5.8M Length	2.29 mm	
			Heavy Wall Hard Drawn Tube		per length
	HW0019		3/4 Hard Drawn Tube 5.8M Length - Heavy Wall		
	HW0022		7/8 Hard Drawn Tube 5.8M Length - Heavy Wall		
	HW0028		1-1/8 Hard Drawn Tube 5.8M Length - Heavy Wall		
	HW0035		1-3/8 Hard Drawn Tube 5.8M Length - Heavy Wall		
	HW0042		1-5/8 Hard Drawn Tube 5.8M Length- Heavy Wall		

Prices and specification may change without notification. All prices are exclusive of GST and freight.

Clamps & Saddles

	Stock Code	Vendors Code	Description	List Price
			Cush-A-Clamp	
	FHI0006	004T008	Cush-A-Clamp 1/4" OD	
	FHI0009	006T010	Cush-A-Clamp 3/8" OD	
	FHI0012	008T012	Cush-A-Clamp 1/2" OD	
	FHI0016	010T014	Cush-A-Clamp 5/8" OD	
	FHI0019	012T016	Cush-A-Clamp 3/4" OD	
	FHI0022	014T018	Cush-A-Clamp 7/8" OD	
	FHI0028	018T022	Cush-A-Clamp 1.1/8" OD	
	FHI0035	022T026	Cush-A-Clamp 1.3/8" OD	
	FHI0042	026N030	Cush-A-Clamp 1.5/8" OD	
	FHI0054	034N040	Cush-A-Clamp 2.1/8" OD	
	FHI0067	042N048	Cush-A-Clamp 2.5/8" OD	
	FHI0080	050N056	Cush-A-Clamp 3.1/8" OD	
	FHCCAL		Aluminium Channel 42 x 20 x 1.6 x 900mm	
			Saddles	
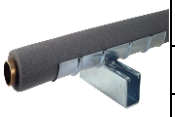	FHS0062	SD250	Saddle Up 2.1/2"	
	FHS0075	SD300	Saddle Up 3"	
	FHS0087	SD350	Saddle Up 3.5"	
			Insulated pipe clamps	
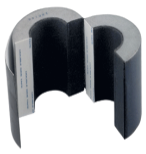	FHT009		Cush-A-Therm Insul Bracket 3/8" Tube, 19mm wt	
	FHT012		Cush-A-Therm Insul Bracket 1/2" Tube, 19mm wt	
	FHT016		Cush-A-Therm Insul Bracket 5/8" Tube, 25mm wt	
	FHT019		Cush-A-Therm Insul Bracket 3/4" Tube, 25mm wt	
	FHT022		Cush-A-Therm Insul Bracket 7/8" Tube, 25mm wt	
	FHT028		Cush-A-Therm Insul Bracket 1 1/8" Tube, 25mm wt	
	FHT035		Cush-A-Therm Insul Bracket 1 3/8" Tube, 25mm wt	
	FHT042		Cush-A-Therm Insul Bracket 1 5/8" Tube, 25mm wt	
	FHT054		Cush-A-Therm Insul Bracket 2 1/8" Tube, 25mm wt	
	FHT067		Cush-A-Therm Insul Bracket 2 5/8" Tube, 25mm wt	
	FHT080		Cush-A-Therm Insul Bracket 3 1/8" Tube, 25mm wt	
			Aluminium Channel	
	FHCCAL		Aluminium Channel 42 x 20 x 1.6 x 900mm	
			Threaded Pipe Clamps	
	FH2012		3/8" - 1/2" Threaded Pipe Clamp 2 Bolt Rubber Lined ; SKU MRIN9-13	
	FH2016		5/8" Threaded Pipe Clamp 2 Bolt Rubber Lined ; SKU MRIN12-16	
	FH2019		3/4" Threaded Pipe Clamp 2 Bolt Rubber Lined ; SKU MRIN15-19	
	FH2022		7/8" Threaded Pipe Clamp 2 Bolt Rubber Lined ; SKU MRIN20-24	
	FH2028		1.1/8" Threaded Pipe Clamp 2 Bolt Rubber Lined ; SKU MRIN23-28	
	FH2035		1.3/8" Threaded Pipe Clamp 2 Bolt Rubber Lined ; SKU MRIN31-36	
	FH2042		1.5/8" Threaded Pipe Clamp 2 Bolt Rubber Lined ; SKU MRIN38-44	
	FH2054		2.1/8" Threaded Pipe Clamp 2 Bolt Rubber Lined ; SKU MRIN50-56	
	FH2067		2.5/8" Threaded Pipe Clamp 2 Bolt Rubber Lined ; SKU MRIN63-69	
	FH2080		3.1/8" Threaded Pipe Clamp 2 Bolt Rubber Lined ; SKU MRIN77-85	
	FHB010		10mm Base Plate for Pipe Clamps ; SKU GHBP10	

Prices and specification may change without notification. All prices are exclusive of GST and freight.

Fastenings

	Stock Code	Vendors Code	Description	Per Pack of	List Price
			Rivets		
	SF73MS42	73MS42	Monel Rivets 4-2 1/8" Dia x 3/16"	100	
	SF73MS43	73MS43	Monel Rivets 4-3 1/8" Dia x 5/16"	100	
	SF73MS44	73MS44	Monel Rivets 4-4 1/8" Dia x 3/8"	100	
	SF73MS45	73MS45	Monel Rivets 4-5 1/8" Dia x 1/2"	100	
			Drills, Power Bits		
	SFDRL3.3	DRL3.3	Double Ended Jobber Drill Bright 3.3mm	10	
	SFPB22SD	PB22SD	Power Bit #2 Square Drive	EACH	
	SFPB2SD100	PB2SD100	Power Bit #2 Square Drive 100mm	EACH	
	SFPB2SD150	PB2SD150	Power Bit #2 Square Drive 150mm	EACH	
	SFPBTEK12L	PBTEK12L	Tek Power Bit 12# x 65mm (5/16)	EACH	
			Cable Ties		
	SFKT15235	KT15235	Cable Tie 150 x 3.6mm Black	100	
	SFKT20035	KT20035	Cable Tie 200 x 3.2mm Black	100	
	SFKT20035NT	KT20035NT	Cable Tie 200 x 3.2mm White	100	
	SFKT29236	KT29236	Cable Tie 295 x 3.6mm Black	100	
	SFKT29236NT	KT29236NT	Cable Tie 295 x 3.6mm White	100	
			Pozi-Drive Countersunk Wood Screws		
	SFPD834CS	PD834CS	Surefast Pozi 8 x 3/4"	200	
	SFPD81CS	PD81CS	Surefast Pozi 8 x 1"	200	
	SFPD8114CS	PD8114CS	Surefast Pozi 8 x 1-1/4"	200	
	SFPD8112CS	PD8112CS	Surefast Pozi 8 x 1-1/2"	200	
	SFPD8134CS	PD8134CS	Surefast Pozi 8 x 1-3/4"	200	
	SFPD82CS	PD82CS	Surefast Pozi 8 x 2"	100	
			Square-Drive Countersunk Wood Screws - Zinc Plated		
	SFSD834CS	SD834CS	Surefast No. 2 Square drive 8 x 3/4"	200	
	SFSD81CS	SD81CS	Surefast No. 2 Square-drive 8 x 1"	200	
	SFSD8114CS	SD8114CS	Surefast No. 2 Square drive 8 x 1-1/4"	200	
	SFSD8112CS	SD8112CS	Surefast No. 2 Square drive 8 x 1-1/2"	200	
	SFSD8134CS	SD8134CS	Surefast No. 2 Square drive 8 x 1-3/4"	200	
	SFSD82CS	SD82CS	Surefast No. 2 Square drive 8 x 2"	100	
			Square-Drive Countersunk Wood Screws - Stainless		
	SFSSD934CS	SSD934CS	Surefast No.2 Square Drive 8 x 3/4"	100	
	SFSSD91CS	SSD91CS	Surefast No.2 Square Drive 8 x 1"	100	
	SFSSD9114CS	SSD9114CS	Surefast No.2 Square Drive 8 x 1-1/4"	100	
	SFSSD9112CS	SSD9112CS	Surefast No.2 Square Drive 8 x 1-1/2"	100	
	SFSSD92CS	SSD92CS	Surefast No.2 Square Drive 8 x 2"	50	
			Tek Screws		
	SFT1225	T1225	Wood Tek Screws Type 17 neo 12g x 25mm	95	
	SFT1240	T1240	Wood Tek Screws Type 17 neo 12g x 40mm	70	
	SFT1250	T1250	Wood Tek Screws Type 17 neo 12g x 50mm	60	
	SFT1265	T1265	Wood Tek Screws Type 17 neo 12g x 65mm	45	
	SFT1225MSD	T1225MSD	Metal Drilling Tek Screws C4 neo 12g x 25mm	70	
	SFT1245MSD	T1245MSD	Metal Drilling Tek Screws C4 neo 12g x 45mm	40	
	SFT1265MSD	T1265MSD	Metal Drilling Tek Screws C4 neo 12g x 65mm	30	
			Self Drilling Screws		
	SFSSD1016MSD	SSD1016MSD	Stainless Pan Square Drive Metal Selfdriller 10 x 16mm	100	
	SFSSD1020MSD	SSD1020MSD	Stainless Pan Square Drive Metal Selfdriller 10 x 20mm	100	
	SFSSD1025MSD	SSD1025MSD	Stainless Pan Square Drive Metal Selfdriller 10 x 25mm	100	
			Wall Anchors		
	SFHWA440.1	HWA440.1	Hollow Wall Anchor M4 8-13mm	25	
	SFSA840J	SA840J	Metal Sleeve Anchor 8 x 40mm	22	
	SFSA1050J	SA1050J	Metal Sleeve Anchor 10 x 50mm	13	
	SFSA1075J	SA1075J	Metal Sleeve Anchor 10 x 75mm	10	
	SFSA1260J	SA1260J	Metal Sleeve Anchor 12 x 60mm	10	
	SFSA12100J	SA12100J	Metal Sleeve Anchor 12 x 100mm	7	
	SFNAR525J	NAR525J	Nylon Wall Anchor Tappet Flat Head 5 x 25mm	100	
	SFNAR540J	NAR540J	Nylon Wall Anchor Tappet Flat Head 5 x 40mm	50	
	SFNAM6525J	NAM6525J	Nylon Wall Anchor Tappet Mushroom Head 6.5 x 25mm	50	
	SFNAR6525J	NAR6525J	Nylon Wall Anchor Tappet Flat Head 6.5 x 25mm	50	
	GANCHOR	ANCHOR	Gorilla Wall Anchor 5mm no nail required	100	
			Plasterboard Screws		
	SFSDPBMJ	SDPBMJ	Metal Plasterboard Screws Zip-its	12	
	SFSDPBMJ/50	SDPBMJ/50	Metal Plasterboard Screws Zip-its	50	
	SFTOGSP/25J	TOGSP/25J	Nylon Self Drilling Plaster Board SnapSkru	25	
	SFTOGSP/100P	TOGSP/100P	Nylon Self Drilling Plaster Board SnapSkru	100	
			Simplefix		
	SFSIM055	SIM055	Simplefix G250 Strap 0.55 x 25mm x 25mtrs	Roll	
	SFSIMCL	SIMCL	Simplefix ClipLock	50	
	SFSIMUB	SIMUB	Simplefix Universal Bracket	30	
			Miscellaneous		
	SFFN10	FN10	Full Nuts ZP 10mm	35	
	SFGB3161	GB3161	Gutterbolts & Nuts 3/16 x 1"	70	
	SFW14114Z	W14114Z	Penny Washers 1/4 x 1-1/4"	100	
	SFW38114Z	W38114Z	Penny Washers 3/8 x 1-1/4"	100	
	SFW38	W38	Zinc Washers M10-3/8" x 21mm	75	

Prices and specification may change without notification. All prices are exclusive of GST and freight.

Insulation

	Stock Code	Description	Carton Quantity	Unit	List Price (2m Length)
		Insulation			
	IT09006	K-Flex Insulation Tube 6mm x 9mm wall	176	2m length	
	IT09010	K-Flex Insulation Tube 10mm x 9mm wall	133	2m length	
	IT09012	K-Flex Insulation Tube 12mm x 9mm wall	117	2m length	
	IT09015	K-Flex Insulation Tube 15mm x 9mm wall	96	2m length	
	IT09020	K-Flex Insulation Tube 20mm x 9mm wall	78	2m length	
	IT09022	K-Flex Insulation Tube 22mm x 9mm wall	68	2m length	
	IT13010	K-Flex Insulation Tube 10mm x 13mm wall	72	2m length	
	IT13012	K-Flex Insulation Tube 12mm x 13mm wall	64	2m length	
	IT13015	K-Flex Insulation Tube 15mm x 13mm wall	56	2m length	
	IT13020	K-Flex Insulation Tube 20mm x 13mm wall	49	2m length	
	IT13022	K-Flex Insulation Tube 22mm x 13mm wall	42	2m length	
	IT13028	K-Flex Insulation Tube 28mm x 13mm wall	36	2m length	
	IT13035	K-Flex Insulation Tube 35mm x 13mm wall	30	2m length	
	IT13042	K-Flex Insulation Tube 42mm x 13mm wall	25	2m length	
	IT13054	K-Flex Insulation Tube 54mm x 13mm wall	20	2m length	
	IT13067	K-Flex Insulation Tube 67mm x 13mm wall	18	2m length	
	IT19010	K-Flex Insulation Tube 10mm x 19mm wall	42	2m length	
	IT19012	K-Flex Insulation Tube 12mm x 19mm wall	36	2m length	
	IT19015	K-Flex Insulation Tube 15mm x 19mm wall	36	2m length	
	IT19020	K-Flex Insulation Tube 20mm x 19mm wall	33	2m length	
	IT19022	K-Flex Insulation Tube 22mm x 19mm wall	30	2m length	
	IT19028	K-Flex Insulation Tube 28mm x 19mm wall	23	2m length	
	IT19035	K-Flex Insulation Tube 35mm x 19mm wall	18	2m length	
	IT19042	K-Flex Insulation Tube 42mm x 19mm wall	16	2m length	
	IT19054	K-Flex Insulation Tube 54mm x 19mm wall	15	2m length	
	IT19067	K-Flex Insulation Tube 67mm x 19mm wall	11	2m length	
	IT19076	K-Flex Insulation Tube 76mm x 19mm wall	11	2m length	
	IT19080	K-Flex Insulation Tube 80mm x 19mm wall	10	2m length	
	IT25010	K-Flex Insulation Tube 10mm x 25mm Wall	27	2m length	
	IT25012	K-Flex Insulation Tube 12mm x 25mm Wall	25	2m length	
	IT25016	K-Flex Insulation Tube 16mm x 25mm Wall	23	2m length	
	IT25020	K-Flex Insulation Tube 20mm x 25mm wall	22	2m length	
	IT25022	K-Flex Insulation Tube 22mm x 25mm wall	20	2m length	
	IT25028	K-Flex Insulation Tube 28mm x 25mm wall	16	2m length	
	IT25035	K-Flex Insulation Tube 35mm x 25mm wall	15	2m length	
	IT25042	K-Flex Insulation Tube 42mm x 25mm wall	12	2m length	
	IT25054	K-Flex Insulation Tube 54mm x 25mm wall	9	2m length	
	IT25067	K-Flex Insulation Tube 67mm x 25mm wall	8	2m length	
	IT25080	K-Flex Insulation Tube 80mm x 25mm wall	6	2m length	

TECHNICAL DATA

Temperature range	-200 °C max +105 °C***(-50°C max +85°C per ST/SK)
Thermal conductivity λW/(m•K) EN 12667 (DIN 52612) - ENISO 8497 (DIN 52613)	-20 °C = 0.034 0 °C = 0.036* +20 °C = 0.038
Thermal conductivity λW/(m•K) L10 EN 12667 (DIN 52612) - ENISO 8497 (DIN 52613)	+40 °C = 0.040 W/(m•K)
Corrosion problems	DIN 1988/7*; pH neutral
Permeability μ EN12086 (DIN 52615)	≥10000**
Fire	Euroclass B, s3, d0 EN 13501-1 * Cl 1 (I)*, Brandkennziffer 5.2 (CH) BS 476 Part 6 1989 Cl. 0 (UK) - B1 DIN 4102 (DE)*, DIN 4102 TEIL 11 (Wand-und Dechendurchführung) NF - FEU 487 (F)*, M1 (E)

* Supervised by an independent Institute
** Supervised permeability μ ≥ 7000, Individual certification μ ≥ 10000.
*** For applications at temperatures lower than -50 °C please contact our Technical office

L'ISOLANTE K-FLEX reserves the right to change data and technical requirements without notice.

Prices and specification may change without notification. All prices are exclusive of GST and freight.

Refrigerants, Oils, Labels

	Stock Code	Vendors Code	Description	List Price
			Refrigerants	
	RG0134		Refrigerant R134a 13.6kg	
	RG0404		Refrigerant R404a 10.9kg	
	RG0407		Refrigerant R407c 11.3kg	
	RG0407F		Refrigerant R407F 11.3kg	
	RG0410		Refrigerant R410a 11.3kg	
	RG0507		Refrigerant R507 11.3kg	
	RGMO99		Dupont ISCEON MO99 Refrigerant 11.35kg DAC	
			6+ Cylinders	
	RG0134		Refrigerant R134a 13.6kg	
	RG0404		Refrigerant R404a 10.9kg	
	RG0407		Refrigerant R407c 11.3kg	
	RG0407F		Refrigerant R407F 11.3kg	
	RG0410		Refrigerant R410a 11.3kg	
	RG0507		Refrigerant R507 11.3kg	
	RGMO99		Dupont ISCEON MO99 Refrigerant 11.35kg DAC	
			All refrigerants will be subject to the following levies:-	
			Recovery	
			Industry training	
			All pricing will be inclusive of Carbon Taxes	
			MSDS sheets available on request	
	RGR600		Refrigerant R600a, 400g Cans	
	VC0001		Valve for 400g R600a Cans	
			Oil	
	LP0132		POE Oil RL32-3MAF 1Litre	
	LP0532		POE Oil RL32H 5Litre	
	LP2032		POE Oil RL32H 20Litre	
	LP0168		POE Oil RL68H 1Litre	
	LP0568		POE Oil RL68H 5Litre	
	LP2068		POE Oil RL68H 20Litre	
	LM0304		Suniso 3GS Mineral Oil 3.78L Pack	
	LM0320		Suniso 3GS Mineral Oil 20L Pack	
	LM0404		Suniso 4GS Mineral Oil 3.78L Pack	
	LM0420		Suniso 4GS Mineral Oil 20L Pack	
	LM0504		Suniso 5GS Mineral Oil 3.78L Pack	
	YJ93091		Yellow Jacket Vacuum Oil - 0.47L	
	YJ93092		Yellow Jacket Vacuum Oil - 0.946L	
	YJ93094		Yellow Jacket Vacuum Oil - 3.785L	
			MSDS sheets available on request	
			Oil Test Kits	
	CG0004	TKO	TKO Oil Test Kit - Mineral Oil	
	CG0005	ETK	ETK Oil Test Kit - POE	
			Labels	
	MA-SMO1		Mineral Oil Label	
	MA-SPA1		PAG Oil Label	
	MA-SPO1		Polyol Ester Oil Label	
	MA-SR134A		Refrigerant Label Light Blue R134a	
	MA-SR22		Refrigerant Label Green R22	
	MA-SR404A		Refrigerant Label Citrus Orange R404a	
	MA-SR406A		Refrigerant Label Blue R406a	
	MA-SR407C		Refrigerant Label Light Brown R407c	
	MA-SR410A		Refrigerant Label Burgundy R410a	
	MA-SR417A		Refrigerant Label Green R417a (MO59)	
	MA-SR507		Refrigerant Label Teal Blue R507 (Large)	

Prices and specification may change without notification. All prices are exclusive of GST and freight.

Condensate Pumps

	Stock Code	Vendors Code	Description					List Price
Condensate Pumps								
				Performance (l/hr@height m)				
				0m	3m	9m	12m	
	PA0010	Mini Orange	Aspen Mini Orange Condensate Pump complete	12	6	4	3	
				0m	5m	10m	12m	
	PA0011	Mini Blanc	Aspen Mini Blanc Condensate Pump complete	12	7	4	N/R	
				0m	4m	6m	8m	
	PA0002	MD1010PM Plus	Microdam Condensate Pump Mercury Plus with Safety Switch	10	9	6	3.5	
			Complete with capping and 90° elbow.					
	PA0007	MD700WP	Microdam Condensate Pump Apollo Plus MD700WP	10	9	6	3.5	
				0m	1m	2m	3m	
	PA0003	MD400W	Microdam Condensate Pump Apollo	186	165	150	110	
			Tank Capacity 0.8l					
	PA0004	MD400	Microdam Condensate Pump Poseidon	237	207	192	N/S	
			Tank Capacity 1.8l					
				0m	4m	6m	8m	
	PA0005	MD600CE	Microdam Condensate Pump Titan	258	207	84		
			Tank Capacity 0.8l					
				0m	5m	10m	12m	
	PA0006	MD1000	Microdam Condensate Pump Hercules	361	280	160	N/S	
			Tank Capacity 3.8l					
	PASWITCH	PASWITCH	Safety Switch - Titan Pump					
			Based in Korea Microdam has produced condensate removal pumps for 14 years and exports to over 20 countries throughout the world. Microdam pumps are specified by both Carrier and Samsung in Korea.					
		For further information please contact Refrigeration Specialties Ltd.						
Condensate Pump Accessories								
	PVCT06		Clear Plastic tube (suits Mercury and Mercury plus pumps)					
	PVCT08		Clear Plastic tube (suits Poseidon, Titan, Hercules and Apollo pumps)					

Prices and specification may change without notification. All prices are exclusive of GST and freight.

Air-Conditioning Decorative Capping

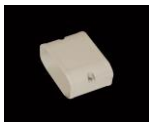

Stock Code	Vendors Code	Description	List Price
		Decorative Capping	
PP0701	PSD7	Pacific Ducting 75mm 2M Length	
PP1001	PSD10	Pacific Ducting 100mm 2M Length	
PP0702	PSW7	Pacific Wall Cover - Two Piece 75mm	
PP1002	PSW10	Pacific Wall Cover - Two Piece 100mm	
PP0703	PSWA7	Pacific Wall Cover - One Piece 75mm	
PP1003	PSWA10	Pacific Wall Cover - One Piece 100mm	
PP0706	PSC7	Pacific Elbow 90 Deg Vertical	
PP1006	PSC10	Pacific Elbow 90 Deg Vertical	
PP0705	PSK7	Pacific 90 Deg Flat Elbow 75mm	
PP0710	PSKF7	Pacific 45 Deg Flat Elbow 75mm	
PP1005	PSK10	Pacific 90 Deg Flat Elbow 100mm	
PP0707	PSF710	Pacific Flexible Joint 75mm - 1000mm long	
PP0709	PSF75	Pacific Flexible Joint 75mm - 500mm long	
PP1007	PSF108	Pacific Flexible Joint 100mm - 800mm long	
PP0708	PSJ7	Pacific Duct Joiner 75mm	
PP1008	PSJ10	Pacific Duct Joiner 100mm	
PP0704	PSP7	Pacific Ceiling Cap 75mm	
PP1004	PSP10	Pacific Ceiling Cap 100mm	
PP0711	PSE7	Pacific End Cover 75mm	
PP1009	PST10	Pacific T-Joint 100mm	
PP1010	PSDR107	Pacific Reducing Socket 100 - 75mm	
PPAUS1	AUS1	Adjustable Unit Support	
GDGA-M450	GA-M450	Pacific Mounting Base 450mm	
PPSGK1	PSGK81	Pacific Wall Bracket D450 x L800 x H380mm 100kg	
GDDB-1JB	DB-1JB	Bracket Arms SS 350mm	
GDDB-2JB	DB-2JB	Bracket Arms SS 450mm	
PPSGY1	PSGY1	Pacific Roof Bracket D400 x L730mm 100KG	
PPFDP16	FDP16	Pacific Drain Pipe 50M x 16mm Coil	
PPPAD01	ACP24362	Black Pad - 900 x 600 Unit Base	

Prices and specification may change without notification. All prices are exclusive of GST and freight.

Driers Sightglasses

	Stock Code	Vendors Code	Description	List Price
			Drier Solid Core	
	DC0001	4490/A	Drier Core Solid 800 CC	
	DC0002	4490/AA	Drier Core Solid Antacid 800 CC	
	DC0003	4495/C	Suction Strainer Core	
	DC0004	DA48	Burnout Drier Core	
	DC0005	111047	Castel Gasket Set, suits more shells	
			Liquid Line Driers Solid Core Molecular Sieve Flare Driers	
	DS2032	4303/2	Drier 032 1/4" MF	
	DS2052	4305/2	Drier 052 1/4" MF	
	DS2082	4308/2	Drier 082 1/4" MF	
	DS2083	4308/3	Drier 083 3/8" MF	
	DS2163	4316/3	Drier 163 3/8" MF	
	DS2164	4316/4	Drier 164 1/2" MF	
	DS2304	4330/4	Drier 304 1/2" MF	
	DS2165	4316/5	Drier 165 5/8" MF	
	DS2305	4330/5	Drier 305 5/8" MF	
			Sweat Driers with Solid Copper Tails	
	DS6032	3001-032S	Drier 032 1/4" SW	
	DS6052	3001-052S	Drier 052 1/4" SW	
	DS6082	3001-082S	Drier 082 1/4" SW	
	DS6083	3001-083S	Drier 083 3/8" SW	
	DS6163	3001-163S	Drier 163 3/8" SW	
	DS6164	3001-164S	Drier 164 1/2" SW	
	DS6304	3001-304S	Drier 304 1/2" SW	
	DS6165	3001-165S	Drier 165 5/8" SW	
	DS6305	3001-305S	Drier 305 5/8" SW	
	DS6415	3001-415S	Drier 415 5/8" SW	
			Driers Sightglass Combo	
	DS5082		Drier/Sightglass Combo 1/4 MF - 082	
	DS5083		Drier/Sightglass Combo 3/8 MF - 083	
	DS5134		Drier/Sightglass Combo 1/2 MF - 164	
			Bi Flow Driers	
	DSH083		Bi-Flow Heat Pump Drier 3/8 MF 083	
	DSH084		Bi-Flow Heat Pump Drier 1/2 MF 084	
	DSH163S		Bi-Flow Heat Pump Drier 3/8 SW 163	
	DSH164S		Bi-Flow Heat Pump Drier 1/2 SW 164	
	DSH165		Bi-Flow Heat Pump Drier 5/8 MF 165	
	DSH165S		Bi-Flow Heat Pump Drier 5/8 SW 165	
			Moisture Indicators	
	SGF006	3950/22	Moisture Indicator MF/FF 1/4"	
	SGF009	3950/33	Moisture Indicator MF/FF 3/8"	
	SGF012	3950/44	Moisture Indicator MF/FF 1/2"	
	SGF016	3950/55	Moisture Indicator MF/FF 5/8"	
	SGM006	3910/22	Moisture Indicator MF/MF 1/4"	
	SGM009	3910/33	Moisture Indicator MF/MF 3/8"	
	SGM012	3910/44	Moisture Indicator MF/MF 1/2"	
	SGM016	3910/55	Moisture Indicator MF/MF 5/8"	
	SGS006	3940/2	Moisture Indicator SW 1/4"	
	SGS009	3940/3	Moisture Indicator SW 3/8"	
	SGS012	3940/4	Moisture Indicator SW 1/2"	
	SGS016	3940/5	Moisture Indicator SW 5/8"	
	SGS022	3940/7	Moisture Indicator SW 7/8"	
	SGS028	3940/9	Moisture Indicator SW 1 1/8"	

TABLE 1: Moisture contained in the fluid [p.p.m.]

Colour	Refrigerant fluid					
	R22	R134a	R404A	R407C	R410A	R507
Green	<60	<75	<30	<30	<30	<30
Green "Chartreuse"	60	75	30	30	30	30
Yellow	>60	>75	>30	>30	>30	>30

Prices and specification may change without notification. All prices are exclusive of GST and freight.

Oil Line Components

	Stock Code	Vendors Code	Description	List Price
			Oil Lev Reg	
	OC0001	5640/D	Oil Lev Reg W SG	
			Adaptors	
	OC0100	5690/X01	Adaptor - 3 Bolt	
	OC0101	5690/X02	Adaptor - 1.1/8" UNF	
	OC0102	5690/X03	Adaptor - 1/8" UNF	
			Oil Strainer	
	OC0105	4510/3	Oil Strainer	
	OD4005	S-4005	Henry 3/8" MF POE Oil Filter Drier S-4005	
			Oil Reservoirs	
	OC0120	5740/3G	Oil Reservoir 7.5L	
	OC1035	3150/X01	Oil Reservoir Reg Valve 0.35Bar	
	OC1140	3150/X02	Oil Reservoir Reg Valve 1.4Bar	
			Oil Separator	
	OS0012	5540/4	Oil Separator 1/2" SW	
	OS0016	5540/5	Oil Separator 5/8" SW	
	OS0022	5540/7	Oil Separator 7/8" SW	
	OS0028	5540/9	Oil Separator 1 1/8" SW	
	OS0035	5540/11	Oil Separator 1 3/8" SW	
	OS0042	5540/13	Oil Separator 1 5/8" SW	
	OS0054	5540/17	Oil Separator 2 1/8" SW	

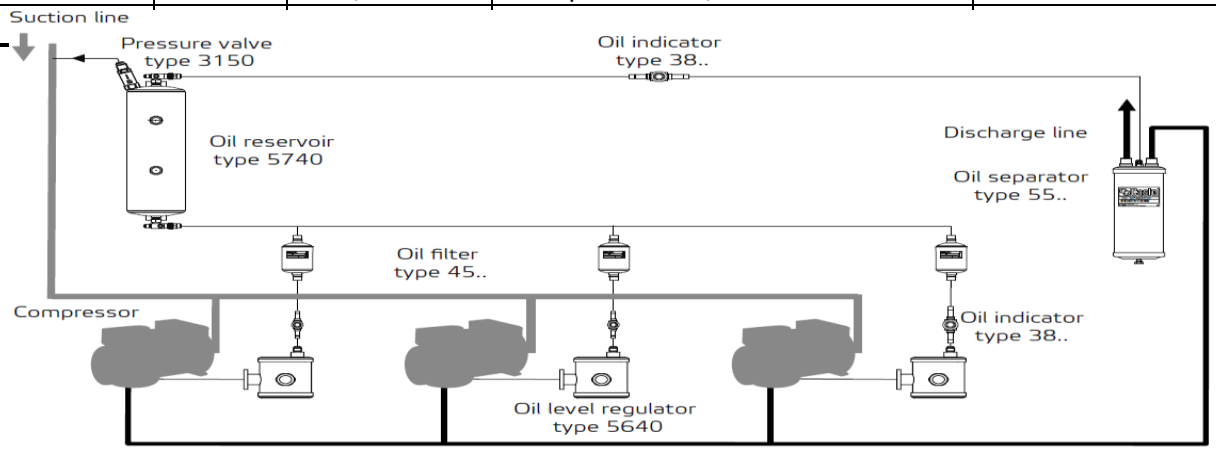

Prices and specification may change without notification. All prices are exclusive of GST and freight.

Suction Line Components - Receivers

	Stock Code	Vendors Code	Description	List Price
Suction Line Accumulators				
	SA0016	ACC-3239-5	Suction Line Accumulator 5/8"	
	SA0022	ACC-5330-7	Suction Line Accumulator 7/8"	
	SA0028	ACC-5430-9	Suction Line Accumulator 1.1/8"	
	SA0035	ACC-5430-11	Suction Line Accumulator 1.3/8"	

Model No.	Connection	Nominal Capacity Qn (kW)				Holding Capacity Liquid	
		R 134a		R 404 A / R 507			
		Max	Min	Max	Min	Lbs	Kg
ACC-3185-4	1/2"	4.2	0.6	4.6	0.7	1.5	0.68
ACC-3239-5	5/8"	6.0	0.9	7.0	1.1	2.0	0.9
ACC-5330-7	7/8"	14.0	2.1	16.1	2.4	8.0	3.62
ACC-5430-9	1-1/8"	25.3	3.8	26.7	4.0	10.5	4.76
ACC-5430-11	1-3/8"	37.6	5.6	42.8	6.4	10.5	4.76

Suction Line Driers				
	DSF0164	DCHSF 164S	Suction Line Filter Drier 164S 1/2" SW	
	DSF0305	DCHSF 305S	Suction Line Filter Drier 305S 5/8" SW	
	DSF0417	DCHSF 417S	Suction Line Filter Drier 417S 7/8" SW	
	DSF0419	DCHSF 419S	Suction Line Filter Drier 419S 1.1/8 SW	

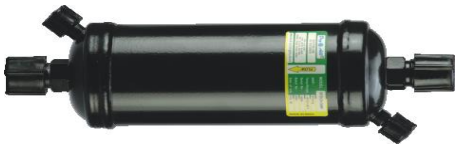

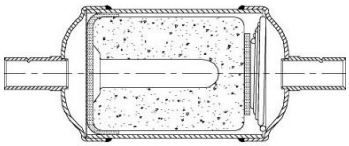

Suction Strainer				
	DC0003	4495/C	Suction Strainer	
Vertical Liquid Receivers				
	LR0014	3310-064014	1.4 Litre 200 (H) x 100 (D) 3/4 R/L x 1/4 ID	
	LR0024	3310-064724	2.4 Litre 250 (H) x 120 (D) 3/4 RL x 3/8 ID	
	LR0044	3310-105544	4.4 Litre 330 (H) x 140 (D) 3/4 R/L x 1/2 ID	
	LR0082	3310-167082	8.2 Litre 390 (H) x 180 (D) - 1 R/L x 1 R/L	
	LR0109	3310-1670109	10.9 Litre 500 (H) x 180 (D) - 1 R/L x 1 R/L	
	LR0145	3310-1686145	14.5 Litre 430 (H) x 225 (D) - 1 R/L x 1 R/L	
Rotalock Valves				
	VM1909S	2600-061220	3/8" OD Rotalock Valve 3/4" Nut	
	VM1912S	2605-081220	1/2" OD Rotalock Valve 3/4" Nut	
	VM2512S	2605-081620	1/2" OD Rotalock Valve 1" Nut	
	VM2516	2605-101620	5/8" OD Rotalock Valve 1" Nut	
	VM3222	ACR401142030	7/8" OD Rotalock Valve 1.1/4" Nut	

Prices and specification may change without notification. All prices are exclusive of GST and freight.

Vibration Eliminators

Stock Code	Vendors Code	Description	List Price
		Vibration Eliminator	
AV0009	7690/3	Vibration Eliminator 3/8" SW	
AV0012	7690/4	Vibration Eliminator 1/2" SW	
AV0016	7690/5	Vibration Eliminator 5/8" SW	
AV0022	7690/7	Vibration Eliminator 7/8" SW	
AV0028	7690/9	Vibration Eliminator 1 1/8" SW	
AV0035	7690/11	Vibration Eliminator 1 3/8" SW	
AV0042	7690/13	Vibration Eliminator 1 5/8" SW	
AV0054	7690/17	Vibration Eliminator 2 1/8" SW	
AV0067	7690/21	Vibration Eliminator 2 5/8" SW	

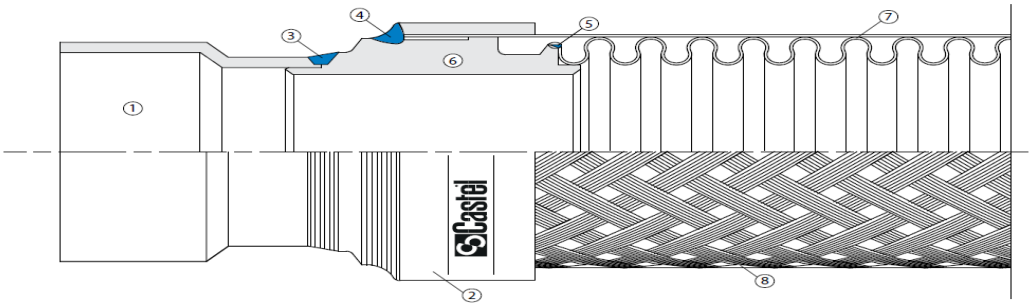

Figure 1

1 - Copper Connections
2 - Net holder
3 - Copper ends welding
4 - Wire braid welding
5 - Corrugated flexible welding
6 - Fitting
7 - Corrugated flexible
8 - Stainless steel wire braid

INSTALLATION

A vibration absorbers can be installed both on suction and discharge lines of a refrigerating system, as close as possible to the compressor. The vibration absorbers are not designed to compensate possible piping misalignment.
Vibration absorbers should be installed perpendicularly to the direction of vibrations. When vibrations exist on two planes, two vibrations absorbers should be used, as shown on fig 2 and 3. For the maximum absorption of vibrations, the refrigerant line should be anchored at the end of the vibration absorber, as shown on fig 2 and 3.
Castel vibration absorbers can be installed vertically too, because they are designed to avoid the retention of condensing water in the wavy zone near to the connections. So there are no problems to install them with temperatures lower then 0°C.
Vibration absorbers are not designed to absorb axial or torsion stress. Care should be taken to allow sufficient space for the vibration to avoid static compression or tension, after brazing on place.
High speed of the refrigerant fluid can produce vibration and noise phenomena. In this case it's advisable to install a larger size of Vibration Absorber.
The connection of the vibration absorbers to the piping is normally performed by a brazing process. The specific design and construction of vibration absorbers allows welding without particular protections to prevent overheating.

WARNING! Ensure a gap corresponding to the 2% of the total length of the vibration absorber device to compensate for possible thermal expansion.

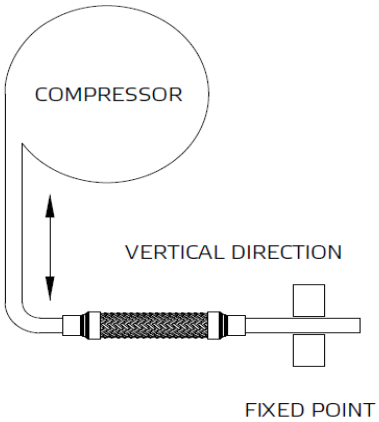

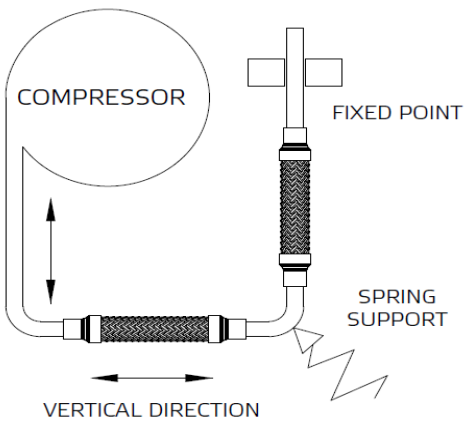

Prices and specification may change without notification. All prices are exclusive of GST and freight.

Valves, Ball, EPR, CPR, Check, HSO

	Stock Code	Vendors Code	Description	List Price
			Evaporator Pressure Regulator Valves	
	VE0012	034L002300	Danfoss KVP12 1/2" OD Evap Pressure Regulator	
	VE0016	034L002900	Danfoss KVP15 5/8" OD Evap Pressure Regulator	
	VE0022	034L002500	Danfoss KVP22 7/8" OD Evap Pressure Regulator	
	VE0028	034L002800	Danfoss KVP28 1 1/8" OD Evap Pressure Regulator	
	VE0035	034L003200	Danfoss KVP35 1.3/8" OD Evap Pressure Regulator	
			Crankcase Pressure Regulator	
	VR0016	034L004900	Danfoss KVL15 5/8" OD Crankcase Pressure Regulator	
	VR0022	034L004500	Danfoss KVL22 7/8" OD Crankcase Pressure Regulator	
	VR0028	034L004600	Danfoss KVL28 1.1/8" OD Crankcase Pressure	
			Ball Valves - with Access Port (AP)	
	VB0009	6590/3A	Ball Valve SW 3/8" AP	
	VB0012	6590/4A	Ball Valve SW 1/2" AP	
	VB0016	6590/5A	Ball Valve SW 5/8" AP	
	VB0022	6590/7A	Ball Valve SW 7/8" AP	
	VB0028	6590/9A	Ball Valve SW 1 1/8" AP	
	VB0035	6590/11A	Ball Valve SW 1 3/8" AP	
	VB0042	6590/13A	Ball Valve SW 1 5/8" AP	
	VB0054	6590/17A	Ball Valve SW 2 1/8" AP	
	VB0067	6590/21A	Ball Valve SW 2 5/8" AP	
	VB0080	6590/25A	Ball Valve SW 3 1/8" AP	
			Ball Valves - No Access Port	
	VBN0009	6590/3	Ball Valve SW 3/8" No Access Port	
	VBN0012	6590/4	Ball Valve SW 1/2" No Access Port	
	VBN0016	6590/5	Ball Valve SW 5/8" No Access Port	
	VBN0022	6590/7	Ball Valve SW 7/8" No Access Port	
	VBN0028	6590/9	Ball Valve SW 1.1/8 No Access Port	
	VBN0035	6590/11	Ball Valve SW 1 3/8" No Access Port	
	VBN0042	6590/13	Ball Valve SW 1 5/8" No Access Port	
	VBN0054	6590/17	Ball Valve SW 2.1/8" No Access Port	
			Check Valves	
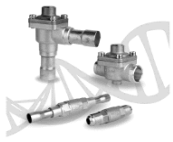	VK0006	3112/2	Check Valve 1/4" MF	
	VK0009	3112/3	Check Valve 3/8" MF	
	VK0012	3112/4	Check Valve 1/2" MF	
	VK0016	3112/5	Check Valve 5/8" MF	
	VK1006	3132/2	Check Valve 1/4" SW Br	
	VK1009	3132/3	Check Valve 3/8" SW Br	
	VK1022	3122/7	Check Valve 7/8" SW Br	
	VK1028	3122/9	Check Valve 1 1/8" SW Br	
	VK1035	3122/11	Check Valve 1 3/8" SW Br	
	VK1042	3122/13	Check Valve 1 5/8" SW Br	
	VK1054	3122/17	Check Valve 2 1/8" SW Br	
			Diaphragm Valves	
	VHS006	6210/2	Hand Shut Off Valve 1/4" MF	
	VHS009	6210/3	Hand Shut Off Valve 3/8" MF	

Prices and specification may change without notification. All prices are exclusive of GST and freight.

Castel TX Valves

	Stock Code	Vendors Code	Description	List Price
			Expansion Valves R134A	
	VT1001	2220/4	TX Valve R134a MF int eql	
	VT1002	2220/4E	TX Valve R134a MF ext eql	
	VT1003	2220/4S	TX Valve R134a MF x SW int eql	
	VT1004	2220/4SE	TX Valve R134a MF x SW ext eql	
			Expansion Valves R22/R407c	
	VT2001	2210/4	TX Valve R22/R407c MF int eql	
	VT2002	2210/4E	TX Valve R22/R407c MF ext eql	
	VT2003	2210/4S	TX Valve R22/R407c MF x SW int eql	
	VT2004	2210/4SE	TX Valve R22/R407c MF x SW ext eql	
			Expansion Valves R404a/R507	
	VT4001	2230/4	TX Valve R404a/R507 MF int eql	
	VT4002	2230/4E	TX Valve R404a/R507 MF ext eql	
	VT4003	2230/4S	TX Valve R404a/R507 MF x SW int eql	
	VT4004	2230/4SE	TX Valve R404a/R507 MF x SW ext eql	
	VT4009	2234/4	TX Valve R404a/R507 MF int eql MOP -20C	
	VT4010	2234/4E	TX Valve R404a/R507 MF ext eql MOP -20C	

TABLE 1b: General Characteristics of Body Assemblies of MOP Charge Thermostatic Expansion Valves

Catalogue number		Connections							Refrigerant	Evaporating temperature Range [°C]	MOP	Max bulb temperature [°C]	TS [°C]		PS [bar]	Risk Category according to PED
		SAE Flare			ODS [mm]		ODS [in]									
internal equalizer	external equalizer	IN	OUT	Equal.	OUT	Equal.	OUT	Equal.					min	max		
2211/4	–	3/8"	1/2"	–	–	–	–	–	R22 R407C	- 40 › + 10	+ 15 °C (95 psi)	100 (1)	-60	+120	34	Art. 3.3
2211/M12S			–	–	12	–	–	–								
2211/4S			–	–	–	–	1/2"	–								
–	2211/4E		1/2"	1/4"	–	–	–	–								
	2211/M12SE		–	–	12	6	–	–								
	2211/4SE		–	–	–	–	1/2"	1/4"								
2221/4	–		1/2"	–	–	–	–	–	R134a		+ 15 °C (55 psi)					
2221/M12S			–	–	12	–	–	–								
2221/4S			–	–	–	–	1/2"	–								
–	2221/4E		1/2"	1/4"	–	–	–	–								
	2221/M12SE		–	–	12	6	–	–								
	2221/4SE		–	–	–	–	1/2"	1/4"								
2231/4	–		1/2"	–	–	–	–	–	R404A R507		+ 15 °C (120 psi)					
2231/M12S			–	–	12	–	–	–								
2231/4S			–	–	–	–	1/2"	–								
–	2231/4E		1/2"	1/4"	–	–	–	–								
	2231/M12SE		–	–	12	6	–	–								
	2231/4SE		–	–	–	–	1/2"	1/4"								
2234/4	–		1/2"	–	–	–	–	–		- 60 › - 25	- 20 °C (30 psi)					
2234/M12S			–	–	12	–	–	–								
2234/4S			–	–	–	–	1/2"	–								
–	2234/4E		1/2"	1/4"	–	–	–	–								
	2234/M12SE		–	–	12	6	–	–								
	2234/4SE		–	–	–	–	1/2"	1/4"								

(1) When valve is installed. 60 °C with element not mounted

Prices and specification may change without notification. All prices are exclusive of GST and freight.

Castel TX Valves, Orifices

	Stock Code	Vendors Code	Description	List Price
			Expansion Valve Orifices	
	VTP001	220X	TX Valve Orifice 0X	
	VTP002	2200	TX Valve Orifice 0	
	VTP003	2201	TX Valve Orifice 1	
	VTP004	2202	TX Valve Orifice 2	
	VTP005	2203	TX Valve Orifice 3	
	VTP006	2204	TX Valve Orifice 4	
	VTP007	2205	TX Valve Orifice 5	
	VTP008	2206	TX Valve Orifice 6	
	VTP051	220X/S	TX Valve Orifice 0.38SW	
	VTP052	2200/S	TX Valve Orifice 0.7 SW	
	VTP053	2201/S	TX Valve Orifice 1.6 SW	
	VTP054	2202/S	TX Valve Orifice 2.1 SW	
	VTP055	2203/S	TX Valve Orifice 4.2 SW	
	VTP056	2204/S	TX Valve Orifice 6 SW	
	VTP057	2205/S	TX Valve Orifice 7.7 SW	
	VTP058	2206/S	TX Valve Orifice 9.1 SW	
			Expansion Valve Adaptors & Filters	
	VTP201	2271/2S	TX FF SW adapter 1/4"	
	VTP202	2271/3S	TX FF SW adapter 3/8"	
	VTP203	2290	TX Filter Flare	
	VTP204	2290/S	TX Filter Sweat	

Catalogue number		Evaporating Temperature Range [°C]			
Valves with SAE Flare connections	Valves with ODS connections	- 40 › + 10			-60› -25
		R22 R407C	R134a	R404A R507	R404A R507
220X	220X/S	0,5	0,4	0,38	0,38
2200	2200/S	1,0	0,9	0,7	0,7
2201	2201/S	2,5	1,8	1,6	1,6
2202	2202/S	3,5	2,6	2,1	2,1
2203	2203/S	5,2	4,6	4,2	3,5
2204	2204/S	8,0	6,7	6,0	4,9
2205	2205/S	10,5	8,6	7,7	6,0
2206	2206/S	15,5	10,5	9,1	6,6

Rated capacities, for temperature range - 40 › + 10, are based on:
- *Evaporating temperature Tevap = + 5 °C*
- *Condensing temperature Tcond = + 32 °C*
- *Refrigerant liquid temperature ahead of valve Tliq = + 28 °C*

Rated capacities, for temperature range - 60 › - 25, are based on:
- *Evaporating temperature Tevap = - 30 °C*
- *Condensing temperature Tcond = + 32 °C*
- *Refrigerant liquid temperature ahead of valve Tliq = + 28 °C*

Prices and specification may change without notification. All prices are exclusive of GST and freight.

Sporlan TX Valves

Stock Code	Vendors Code	Description	Nominal Capacity Range KW			List Price
			R404A	R22	R134A	
Sporlan BQ TX Valves						
VTB001	168198	Sporlan BQ Valve Body SBQE-ODF				
Sporlan BQ Orifice						
VTPAAA		Sporlan BQ Orifice - AAA - Red	0.4 - 0.7	0.4 - 1.2	0.4 - 0.7	
VTPAA	168304	Sporlan BQ Orifice - AA - Yellow	0.7 - 1.6	1.2 - 2.3	0.7 - 1.6	
VTPA	168306	Sporlan BQ Orifice - A - Blue	1.7 - 3.5	2.6 - 5.3	1.7 - 3.5	
VTPB	168307	Sporlan BQ Orifice - B - Pink	3.5 - 7.0	6.1 - 10.5	4.4 - 7.0	
VTPC	168308	Sporlan BQ Orifice - C - White	7.0 - 10.5	11.4 - 19.3	7.0 - 10.5	
Parker / Sporlan Power Elements						
VTP300	180384P	Parker/Sporlan KT-46-JX60 Element			-25°C to +15°C MOP	
VTP301	180377P	Parker/Sporlan KT-46-JW Element			-35°C to +15°C Commercial	
VTP302	180418P	Parker/Sporlan KT-46-VX35 Element		-40°C to -20°C LT MOP		
VTP303	180402P	Parker/Sporlan KT-46-VX100 Element		-25°C to +15°C Commecial MOP		
VTP304	180401P	Parker/Sporlan KT-46-VW Element		-35°C to +15°C Commercial		
VTP352	180230	Sporlan BQ KT-43-SZP Element	-40°C to -20°C LT Mop			
VTP351	180318	Sporlan BQ KT-43-SZ Element	-40°C to -20°C LT			
VTP350	180204	Sporlan BQ KT-43-SC Element	-35°C to +15°C Commercial			
VTP307	181222P	Parker/Sporlan KT-46-ZX200 Element	R410A Commercial MOP -25°C to +15°C R410A Air Conditioning 0°C to +15°C R410A Heat Pump -25°C to +15°C			
Sporlan S Series MT TX Valves						
VT2011	SSE-4-C	Sporlan SSE-4-SC TX Valve	13.7			
VT2012	SSE-6-C	Sporlan SSE-6-SC TX Valve	20.5			
	SSE-7-C	Sporlan SSE-7-SC TX Valve	23.9			
	SSE-10-C	Sporlan SSE-10-SC TX Valve	34.1			
Sporlan S Series LT TX Valves						
	SSE-4-Z	Sporlan SSE-4-Z TX Valve	13.7			
	SSE-4-ZP	Sporlan SSE-4-ZP MOP TX Valve	13.7			
	SSE-6-Z	Sporlan SSE-6-Z TX Valve	20.5			
	SSE-6-ZP	Sporlan SSE-6-ZP MOP Tx Valve	20.5			
	SSE-7-Z	Sporlan SSE-7-Z TX Valve	23.9			
	SSE-7-ZP	Sporlan SSE-7-ZP MOP TX Valve	23.9			
VT2014	SSE-10-Z	Sporlan SSE-10-Z TX Valve	34.1			
	SSE-10-ZP	Sporlan SSE-10-ZP MOP TX Valve	34.1			

Prices and specification may change without notice. All pricing is exclusive of GST and freight.

Castel Electronic TX Valves

	Stock Code	Vendors Code	Description	List Price
			Solenoid Expansion Valves	
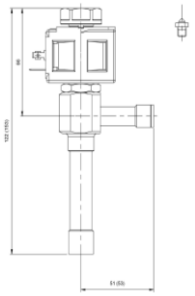	VTS001	2028/3S01	ETVX 01 Solenoid Expansion Valve	
	VTS002	2028/3S02	ETVX 02 Solenoid Expansion Valve	
	VTS003	2028/3S03	ETVX 03 Solenoid Expansion Valve	
	VTS004	2028/3S04	ETVX 04 Solenoid Expansion Valve	
	VTS005	2028/3S05	ETVX 05 Solenoid Expansion Valve	
	VTS006	2028/3S06	ETVX 06 Solenoid Expansion Valve	
	VTS007	2028/4S07	ETVX 07 Solenoid Expansion Valve	

TABLE 1: General Characteristics of PWM solenoid expansion valves

Catalogue number	ODS Connections [in] IN	[in] OUT	[mm] IN	[mm] OUT	Orifice Flow [mm]	Kv Factor [m³/h]	Opening pressure differential [bar] MinOPD	MOPD AC/RAC	MOPD DC	Operating principles	Minimum working time [s]	TS [°C] min	TS [°C] max	PS [bar]	Risk Category according to PED
2028/3S01	3/8"	1/2"	–	–	0,5	0,01	0	18	18	PWM (Pulse Width Modulating)	1	-40	100	45	Art. 3.3
2028/M10S01	–	–	10	12											
2028/3S02	3/8"	1/2"	–	–	0,07	0,017									
2028/M10S02	–	–	10	12											
2028/3S03	3/8"	1/2"	–	–	0,8	0,023									
2028/M10S03	–	–	10	12											
2028/3S04	3/8"	1/2"	–	–	1,1	0,043									
2028/M10S04	–	–	10	12											
2028/3S05	3/8"	1/2"	–	–	1,3	0,065									
2028/M10S05	–	–	10	12											
2028/3S06	3/8"	1/2"	–	–	1,7	0,113									
2028/M10S06	–	–	10	12											
2028/4S07	1/2"	5/8"	–	–	2,3	0,2			14						
2028/M12S07	–	–	12	16											

TABLE 3: Orifice – Nominal capacities in kW

Catalogue number	Orifice type	Orifice size [mm]	Refrigerent R22	R134a	R404A R507	R407C	R410A
9150/R63	01	0,5	1	0,9	0,8	1,1	1,3
9150/R64	02	0,7	1,9	1,7	1,6	2	2,4
9150/R65	03	0,8	2,5	2	1,9	2,4	3
9150/R66	04	1,1	3,9	3,2	2,9	3,8	4,8
9150/R67	05	1,3	6,7	5,6	5,1	6,7	8,4
9150/R68	06	1,7	9,2	7,7	7	9,1	11,4
9150/R69	07	2,3	14,7	12,2	11,3	15,3	18,2

Prices and specification may change without notification. All prices are exclusive of GST and freight.

Valves, Receiver, PRV, Solenoid

	Stock Code	Vendors Code	Description	List Price
			Schrader Valve	
	VM0006	8350/X03	Schrader with Tail 1/4"	
			Receiver Valves	
	VM0606	6110/22	Receiver Valves 1/4" MF x 1/4" NPT	
	VM0609	6110/23	Receiver Valves 1/4" MF x 3/8" NPT	
	VM0906	6110/32	Receiver Valves 3/8" MF x 1/4" NPT	
	VM0909	6110/33	Receiver Valves 3/8" MF x 3/8" NPT	
			Pressure Relief Valves	
	VP3006	3060/23C300	Pressure Relief Valve Angle 1/4" NPT x 3/8" SAE 300PSI	
	VP3012	3060/45C300	Pressure Relief Valve Angle 1/2" NPT x 5/8" SAE 300PSI	
	VP3506	3060/23C350	Pressure Relief Valve Angle 1/4" NPT x 3/8" SAE 350PSI	
	VP3512	3060/45C350	Pressure Relief Valve Angle 1/2" NPT x 5/8" SAE 350PSI	
	VP4006	3060/23C400	Pressure Relief Valve Angle 1/4" NPT x 3/8" SAE 400PSI	
	VP4012	3060/45C400	Pressure Relief Valve Angle 1/2" NPT x 5/8" SAE 400PSI	
			2 Way Valve	
	VP1000	3032/44	2 Way Valve 1/2" NPT	
	VP1002	3032/64	2 Way Valve 3/4" x 1/2" NPT	
			Solenoid Valves Spares	
	VS6001	9150/R02	Faston Connector	
	VS6002	9150/R45	Solenoid coil connector	
	VS6003	9900/X91	Magnet Tool	
			Solenoid Coils	
	VS6220	9105/RA6	Coil Type HM2 220/230 VAC UL RECOGN.	
	VS7012	9120/RD1	Coil Type HM3 12 VDC	
	VS7024	9120/RD2	Coil Type HM3 24 VDC	
	VS8024	9160/RA2	Coil Type HM4 24 VAC	
	VS8220	9160/RA6	Coil Type HM4 220/230 VAC	
	VS9012	9160/RD1	Coil Type HM4 12 VDC	
	VS9024	9160/RD2	Coil Type HM4 24 VDC	
			Solenoid Valves	
	VSF006	1020/2A6	NC Solenoid Valve 1/4" MF inc/coil	
	VSF009	1020/3A6	NC Solenoid Valve 3/8" MF inc/coil	
	VSF012	1064/4A6	NC Solenoid Valve 1/2" MF inc/coil	
	VSF016	1070/5A6	NC Solenoid Valve MF 5/8" inc/coil kV 2.61	
	VSF016L	1090/5A6	NC Solenoid Valve MF 5/8" inc/coil kV 3.8	
	VSS006	1028/2A6	NC Solenoid Valve 1/4" SW inc/coil	
	VSS009	1068/3A6	NC Solenoid Valve 3/8" SW inc/coil	
	VSS009D	1028/3A6	NC Solenoid Valve 3/8" SW inc/coil	
	VSS012	1078/4A6	NC Solenoid Valve 1/2" SW inc/coil	
	VSS016	1098/5A6	NC Solenoid Valve SW 5/8" inc/coil	
	VSS022	1098/7A6	NC Solenoid Valve 7/8" SW inc/coil	
	VSS028	1078/9A6	NC Solenoid Valve 1 1/8" SW inc/coil	

Prices and specification may change without notification. All prices are exclusive of GST and freight.

Evaporators, HEA

Medium & Low Temperature Evaporators

Medium & Low Temperature Capacities @ -5°C sst & -25°C sst / 6 KTD R404A

Stock Code	Model	Capacity @ -5°C sst Watts R404A	Capacity @ -5°C sst Watts R134A	Partial Defrost Total (W)	Weight (Kg)	Dimensions (mm)			List Price
						W	D	H	
EL0130	HEA 2501 09 4P	1284	1198	0.44	14	702	430	385	
EL0170	HEA 3001 12 4P	1789	1669	0.44	19	702	430	495	
EL0300	HEA 2502 17 4P	2487	2321	0.73	25	1094	430	385	
EL0480	HEA 3002 23 4P	3630	3388	0.73	32	1094	430	495	
EL0500	HEA 2503 26 4P	3645	3402	1.03	36	1486	430	385	
EL0650	HEA 2504 35 4P	4867	4542	1.31	47	1878	430	385	
EL0740	HEA 3003 35 4P	5501	5134	1.03	46	1486	430	495	
EL0970	HEA 3004 46 4P	7239	6755	1.31	60	1878	430	495	
EL1350	HEA 4502 61 4P	10023	9353	1.31	82	1878	460	635	
EL1470	HEA 3006 69 4P	10914	10185	1.89	85	2662	430	495	
EL1900	HEA 4503 92 4P	14107	13165	1.9	122	2662	460	635	

Stock Code	Model		Capacity @ -25°C sst Watts	Full Defrost Total	Weight (Kg)	Dimensions (mm)			List Price
						W	D	H	
ELD013	HEA 2501 09 4D		1080	1.32	14	702	430	385	
ELD017	HEA 3001 12 4D		1508	1.76	19	702	430	495	
ELD024	HEA 2502 17 4D		2091	2.19	245	1094	430	385	
ELD035	HEA 3002 23 4D		3006	2.92	32	1094	430	495	
ELD036	HEA 2503 26 4D		3068	3.09	36	1486	430	385	
ELD047	HEA 2504 35 4D		4097	3.93	47	1878	430	385	
ELD045	HEA 3003 35 4D		4628	4.12	46	1486	430	495	
ELD071	HEA 3004 46 4D		6094	5.24	60	1878	430	495	
ELD098	HEA 4502 61 4D		8434	6.55	82	1878	460	635	
ELD107	HEA 3006 69 4D		9171	7.56	85	2662	430	495	
ELD139	HEA 4503 92 4D		11914	9.45	122	2662	460	635	

HEA Features:-

Clean white powder coated finish
Pressure tested to 30 bar
Defrost elements located in the coil and drain pan
12mm Copper tube coil

Prices and specification may change without notification. All prices are exclusive of GST and freight.

Evaporators, HEJ, HEC, HED

Medium & Low Temperature Evaporators

Medium & Low Temperature Capacities @ -5°C sst & -25°C sst / 6 KTD R404A

Stock Code	Model	Capacity @ -5°C sst Watts R404A	Capacity @ -25°C sst Watts R404A	Electric Defrost Total (W)	Weight (Kg)	Dimensions (mm)			List Price
						W	H	D	
ES0075	HEJ-1D	608	514	0.5	6	410	160	365	
ES0150	HEJ-2D	1202	1011	0.8	10	735	160	365	
ES0220	HEJ-3D	1804	1517	1.2	13	1060	160	365	
ES0300	HEJ-4D	2398	2022	1.5	18	1385	160	365	

Stock Code	Model	Capacity @ -5°C sst Watts R404A	Capacity @ -25°C sst Watts R404A	Electric Defrost Total (W)	Weight (Kg)	Dimensions (mm)			List Price
						W	H	D	
ES0115	HEC 2501 06 4D	853	745	0.8	13	660	497	246	
ES0132	HEC 2501 07 4D	980	848	1.1	14	860	497	246	
ES0162	HEC 2501 09 4D	1202	994	1.1	15	860	497	246	
ES0225	HEC 2502 12 4D	1670	1517	1.4	22	1062	497	246	
ES0328	HEC 2502 18 4D	2435	2040	2.0	27	1462	497	246	

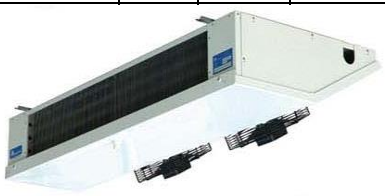

Stock Code	Model	Capacity @ -5°C sst 6 KTD	Capacity @ 0°C 10 KTD		Weight (Kg)	Dimensions (mm)			List Price
						W	H	D	
ET0413	HED 3501 16 4L	2040	4130		35	963	925	260	
ET0506	HED 3501 16 4N	2500	5060		35	963	925	260	
ET0827	HED 3502 31 4L	4080	8270		60	1565	925	260	
ET1010	HED 3502 31 4N	5000	10100		60	1565	925	260	
ET1240	HED 3503 47 4L	6120	12400		85	2167	925	260	
ET1520	HED 3503 47 4N	7500	15200		85	2167	925	260	
ET1650	HED 3504 62 4L	8160	16500		110	2769	925	260	
ET1980	HED 3504 62 4N	9800	19800		110	2769	925	260	

Prices and specification may change without notification. All prices are exclusive of GST and freight.

Evap Installation Accessories

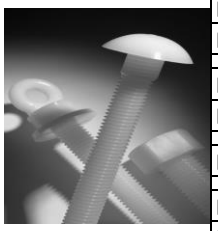

Stock Code	Vendors Code	Description	Unit	List Price
Bolts				
BBKITC		Bluemay Evaporator Bolt Kit Chiller	KIT	
BBKITF		Bluemay Evaporator Bolt Kit Freezer	KIT	
BB0150		Bluemay Buffalo Bolt 10mm x 150mm	EACH	
BB0250		Bluemay Buffalo Bolt 10mm x 250mm	EACH	
BBHN10		Bluemay Hex Nut 10mm Full	EACH	
BBWL10		Bluemay Washer 10mm x 75mm Large	EACH	
BBWM10		Bluemay Washer 10mm x 45mm Medium	EACH	
BBWS10		Bluemay Washer 10mm x 21mm Standard	EACH	
PVC Drain Pipe				
DP0015	15XCE	15mm PVC Drain Pipe 3.9m	EACH	
DP0020	20XCE	20mm PVC Drain Pipe 3.9m	EACH	
DP0025	25XCE	25mm PVC Drain Pipe 3.9m	EACH	
DP0032	32XCE	32mm PVC Drain Pipe 3.9m	EACH	
DP4515	2117015	15mm PVC 45D Elbow	EACH	
DP4520	2117020	20mm PVC 45D Elbow	EACH	
DP4525	2117025	25mm PVC 45D Elbow	EACH	
DP4532	2117032	32mm PVC 45D Elbow	EACH	
DP9015	2103015	15mm PVC 90D Equal Elbow	EACH	
DP9020	2103020	20mm PVC 90D Equal Elbow	EACH	
DP9025	2103025	25mm PVC 90D Equal Elbow	EACH	
DP9032	2103032	32mm PVC 90D Equal Elbow	EACH	
DPCT20	EZT113	20mm Cross Trap Clear	EACH	
DPPT20	JTRAP	20mm Clear P-Trap	EACH	
DPPS15	PPS084	15mm Full Pipe Saddle	EACH	
DPPS20	PPS106	20mm Full Pipe Saddle	EACH	
DPPS25	PPS143	25mm Full Pipe Saddle	EACH	
DPPS32	PPS168	32mm Full Pipe Saddle	EACH	
DPRS2015	2109020015	20mm x 15mm PVC Reducing Socket	EACH	
DPRS2520	2109025020	25mm x 20mm PVC Reducing Socket	EACH	
DPRS3225	2109032025	32mm x 25mm PVC Reducing Socket	EACH	
DPS015	2108015	15mm PVC Double End Socket	EACH	
DPS020	2108020	20mm PVC Double End Socket	EACH	
DPS025	2108025	25mm PVC Double End Socket	EACH	
DPS032	2108032	32mm PVC Double End Socket	EACH	
DPST20	2111020	20mm PVC Female Threaded Socket	EACH	
DPSMV15	2112015	15mm PVC Male Valve Socket	EACH	
DPSMV20	2112020	20mm PVC Male Valve Socket	EACH	
DPT015	2106015	15mm PVC Equal Tee	EACH	
DPT020	2106020	20mm PVC Equal Tee	EACH	
DPT025	2106025	25mm PVC Equal Tee	EACH	
DPT032	2106032	32mm PVC Equal Tee	EACH	
DPMU015	2122015	15mm PVC Mac Union	EACH	
DPMU020	2122020	20mm PVC Mac Union	EACH	
DPMU025	2122025	25mm PVC Mac Union	EACH	
DPMU032	2122032	32mm PVC Mac Union	EACH	
DPGLUE		PVC Solvent 250ml	EACH	
Heat Trace				
DHT030		Defrost Heat Trace 30w/m self terminating	Metre	
DHTKIT		Connection Kit for Defrost Heat Trace	EACH	

Prices and specification may change without notification. All prices are exclusive of GST and freight.

Refspecs Condensing Units

Medium Temperature R134A - Standard Europe TE Operating Conditions @ + 32°C Ambient

220 240 Volt 50 Hz Single Phase

Stock Code	Compressor Tecumseh	Nom HP	Capacity (Watts)			Disp cc	dBA @ 1 Mtr	Dimensions (mm)			Weight KG	List Price	Indent Items (*)
			-10	-5	0			W	D	H			
RCUY038M	CAE4440YHR	1/3	546	667	797	12	59	322	404	257	18.9		
RCUY050M	CAJ4461YHR	1/2	819	1004	1203	18.3	67	356	485	305	31.5		
RCUY075M	CAJ4492YHR	3/4	1230	1513	1816	25.9	71	430	486	338	40.5		
RCUY100M	CAJ4511YHR	1	1560	1873	2217	32.7	71	430	486	338	41		
RCUY150M	FH4518YHR	1 1/2	2366	2921	3553	53.2		510	620	450	64.5		

Medium Temperature R404A - Standard Europe Operating Conditions @ + 32°C Ambient

220 240 Volt 50 Hz Single Phase

RCU075M	CAJ9480Z	3/4	1287	1506	1736	15.2	69	430	486	338	34		
RCU100M	CAJ9510Z	1	1574	1834	2105	18.3	71	430	486	338	41		
RCU112M	CAJ9513Z	1 1/8	1891	2210	2535	24.2	72	430	486	338	41		
RCU125M	CAJ4517Z	1 1/4	2354	2792	3225	25.9	74	510	620	450	48		
RCU150M	CAJ4519Z	1 1/2	3014	3533	4068	34.4	75	510	620	450	48		
RCU200M	FH4524Z	2	3245	3844	4463	43.5	76	510	630	450	56		
RCU250M	FH4531Z	2 1/2	4381	5169	5962	56.6	79	600	608	558	78		

380 440 Volt 50 Hz Three Phase

RCUT300M	TFH4540Z	3	5498	6475	7491	74.2	81	600	608	558	81		
RCUT375M	TAG4546Z	3 3/4	6547	7949	9446	90.2	86	1080	650	565	115		
RCUT500M	TAG4561Z	5	8009	9733	11557	112.5	84	1080	650	565	122		
RCUT625M	TAG4573Z	6	9721	11596	13577	134.8	85	1080	650	565	127		

Scroll Compressor Units

RCUS700M	ZB48KQE	7	12100	14500	17300	18.8							*
RCUS800M	ZB58KQE	8	14500	17450	20800	22.2							*
RCUS900M	ZB66KQE	9	16350	19550	23250	25.7							*
RCUS1000M	ZB76KQE	10	19350	23250	27650	28.8							*
RCUS1300M	ZB95KQE	13	23850	28550	33900	35.6							*
RCUS1500M	ZB114KQE	15	28250	34100	40700	43.3							*

Low Temperature R404A - Standard Europe TE Operating Conditions @ + 32°C Ambient

220 240 Volt 50 Hz Single Phase

			Capacity (Watts)										
			-30	-25	-20								
RCU100L	CAJ2446Z	1	801	994	1197	26.1	74	430	486	338	39		
RCU150L	CAJ2464Z	1 1/2	1150	1434	1737	35.4	74	430	486	338	40		
RCU200L	FH2480Z	2	1641	2069	2509	53.2	76	510	630	450	57		
RCU300L	FH2511Z	3	2096	2682	3277	74.3	76	510	630	450	58		

380 440 Volt 50 Hz Three Phase

RCUT300L	TFH2511Z	3	2096	2682	3277	74.3	78	510	630	450	54		
RCUT400L	TAG2516Z	4	3130	3997	4932	112.5	78	1002	618	452	106		
RCUT500L	TAG2522Z	5	3953	4988	6099	134.8	80	1002	618	452	110		

380 440 Volt 50 Hz Three Phase

RCUS750L	ZF24K4E	7 1/2	6450	7900	9600	21.9							*
RCUS1000L	ZF33K4E	10	8750	11000	13500	28.9							*
RCUS1300L	ZF40K4E	13	10950	13500	16400	35.8							*
RCUS1500L	ZF48K4E	15	12600	15600	18900	42.1							*

Note: -

All Medium Temperature Units come complete with Dual Pressure Switch (HP Man Reset) Fitted.

Low Temp Units up to 2 HP come coplete with Dual Pressure Control (HP Man Reset) & Accumulator Fitted. All Low Temperature Units over 2HP come complete with Oil Sep, Accumulator, Dual Pressure Switch (HP Man Reset) Fitted.

Prices and specification may change without notification. All prices are exclusive of GST and freight.

Dorin Condensing Units

Performance Data is Based on European Standard EN 12900

Stock Code	Model	HP	Disp m3/hr	Refrigerant	kW Capacities @ 30°C Ambient							Dimensions (mm)			List Price
					5	0	-5	-10	-15	-20	-25	W	D	H	
RUC0350MTY	H350CC	3.5	15.9	R404A	14.9	12.5	10.4	8.6	7.0	5.6	4.5				
				R134A	9.4	7.6	6.1	4.8	3.7	2.7		1215	920	635	
RUC0380MTY	H380CC	3.8	17.5	R404A	16.4	13.8	11.5	9.5	7.8	6.3	5.0				
				R134A	10.2	8.3	6.7	5.3	4.2	3.2		1215	920	635	
RUC0503MTY	H503CC	5	22.8	R404A	21.8	18.4	15.3	12.6	10.2	8.1	6.4				
				R134A	13.9	11.3	9.1	7.2	5.6	4.2		1215	920	635	
RUC0700MTY	H700CC	7	27.3	R404A	26.1	21.9	18.2	14.9	12.1	9.7	7.6				
				R134A	16.6	13.6	10.9	8.7	6.8	5.2		1415	920	840	
RUC0750MTY	H750CC	7.5	33.5	R404A	31.4	26.3	21.9	18.0	14.6	11.7	9.2				
				R134A	20.2	16.4	13.2	10.5	8.2	6.3		1415	920	840	
RUC1000MTY	H1000CC	10	38.6	R404A	39.4	33.0	27.3	22.4	18.2	14.5	11.4				
				R134A	24.4	19.9	15.9	12.6	9.8	7.4		1415	920	940	
RUC1500MTY	H1500CC	15	48.8	R404A	49.6	41.7	34.6	28.5	23.2	18.6	14.7				
				R134A	30.8	25.1	20.2	16.0	12.5	9.6		2110	1105	840	
RUC2000MTY	H2000CC	20	57	R404A	57.4	48.2	40.1	33.0	26.9	21.6	17.1				
				R134A	36.2	29.4	23.5	18.6	14.4	11.0		2110	1105	940	

Low Temperature

Stock Code	Model	HP	Disp m3/hr	Refrigerant	kW Capacities @ 30°C Ambient							Dimensions (mm)			List Price
					-10	-15	-20	-25	-30	-35	-40	W	D	H	
RUC0350LTY	H350SB	3.5	17.5	R404A		7.7	6.2	5.0	3.9	3.0	2.2	1215	920	635	
RUC0380LTY	H380SB	3.8	19.5	R404A		8.8	7.0	5.6	4.4	3.4	2.6	1215	920	635	
RUC0503LTY	H503CS	5	26.4	R404A	14.8	12.1	9.8	7.8	6.1	4.7	3.4	1215	920	635	
RUC0700LTY	H700CS	7	31.8	R404A	17.6	14.3	11.5	9.0	7.0	5.2	3.7	1415	920	840	
RUC0750LTY	H750CS	7.5	38.2	R404A	20.8	17.0	13.6	10.8	8.4	6.3	4.6	1415	920	840	
RUC1000LTY	H1000CS	10	48.8	R404A	28.7	23.3	18.7	14.8	11.4	8.6	6.2	1415	920	940	
RUC1500LTY	H1500CS	15	56.9	R404A	32.9	26.8	21.6	17.0	13.2	9.9	7.1	1415	920	940	
RUC2000LTY	H2000CS	20	75.8	R404A	42.4	34.6	27.9	22.1	32.7	13.1	9.5	2110	1105	840	
RUC2500LTY	H2500CS	25	85	R404A	47.5	38.8	31.3	24.9	19.4	14.7	10.6				
RUC2900LTY	H2900CS	29	102	R404A	57.0	46.5	37.4	29.6	23.0	17.3	12.5				
RUC3500LTY	H3500CS	35	127	R404A	69.7	56.9	45.8	36.3	28.1	21.2	15.3				

Dorin Condensing Units come complete with:-

Fan speed controller
HP/LP switch
Liquid receiver
Suction accumulator
Castel relief valve
Castel vibration eliminator
Castel drier filter
Castel sight glass

Castel oil separator

Prices and specification may change without notification. All prices are exclusive of GST and freight.

Refspecs Frigo-Packs

Stock Code	Compressor	Nom HP	R404A -5°C	R404A 0°C	R404A +5°c	Fans No Dia	Width	Depth	Height	Disp cc	KG	List Price
Nominal Capacity (kW) @ 30°C Ambient												
Medium Temperature Tecumseh 220/240 Volt 50 Hz Single Phase												
RFPMM100	CAJ9510Z	1	1.8	2.1	2.5	1 X 350	880	410	530	18.3		
RFPMM125	CAJ4517Z	1 1/4	2.8	3.2	3.8	1 X 350	880	410	530	26.0		
RFPMM150	CAJ4519Z	1 1/2	3.5	4.1	4.8	1 x 350	880	410	530	34.5		
RFPMM200	FH4524Z	2	3.8	4.5	5.1	1 x 450	1130	510	630	43.5		
RFPMM250	FH4531Z	2 1/2	5.2	6.0	6.8	1 x 450	1150	625	664	56.6		
Medium Temperature Tecumseh 380/415 Volt 50 Hz Three Phase												
RFPMT300	TFH4540Z	3	6.5	7.5	8.4	1 x 450	1130	510	630	74.2		
RFPMT400	TAG4546Z	4	7.9	9.4	11.0	1 x 500	1130	510	780	90.2		
RFPMT500	TAG4561Z	5	9.7	11.6	13.5	2 x 450	1130	510	1230	112.5		
RFPMT625	TAG4573Z	6 1/2	11.6	13.6	15.7	2 x 450	1130	510	1230	134.8		
Medium Temperature Scroll Compressor 380/415 Volt 50 Hz Three Phase												
			R404A -20°C	R404A -5°C	R134A -5°C							
RFPM700	ZB48KQE-TFD	7	8.2	14.5	9.0	2 X 350	1660	790	1015	18.8	265	
RFPM800	ZB58KQE-TFD	8	9.5	17.5	10.0	2 X 500	1660	790	1015	22.1	270	
RFPM900	ZB66KQE-TFD	9	11.1	19.6	11.4	2 X 500	1660	790	1015	25.7	270	
RFPM1000	ZB76KQE-TFD	10	12.9	23.3	13.1	2 X 500	1660	790	1015	28.8	275	
RFPM1300	ZB95KQE-TFD	13	15.6	28.6		2 X 500	1660	790	1015	36.4	275	
RFPM1500	ZB114KQE-TFD	15	18.3	34.1		2 X 500	1660	790	1015	43.3	295	
Low Temperature Tecumseh 220/240 Volt 50 Hz Single Phase												
			-30°C	-25°C	-20°C							
RFPML200	FH2480Z	2	1.64	2.07	2.51	1 x 450	1130	510	630	53.2		
Low Temperature Tecumseh 380/415 Volt 50 Hz Three Phase												
RFPML300	TFH2511Z	3	2.1	2.7	3.3	1 x 450	1130	510	630	74.3		
RFPML400	TAG2516Z	4	3.1	4.0	4.9	1 x 500	1130	510	780	112.5		
RFPML500	TAG2522Z	5	4.0	5.0	6.1	2 x 450	1130	510	1230	134.8		
Low Temperature Scroll Compressor 380/415 Volt 50 Hz Three Phase												
			-40°C	-30°C	-25°C							
RFPL400	ZF13K4E-TFD	4	2.2	3.5	4.3	2 X 350	1285	625	820	11.8	125	
RFPL500	ZF15K4E-TFD	5	2.7	4.3	5.3	2 X 350	1285	625	820	14.5	150	
RFPL600	ZF18K4E-TFD	6	3.4	5.2	6.4	2 X 350	1285	625	820	17.2	155	
RFPL750	ZF24K4E-TFD	7 1/2	4.0	6.5	7.9	2 X 500	1660	790	1015	21.9	260	
RFPL1000	ZF33K4E-TFD	10	4.5	8.8	11.0	2 X 500	1660	790	1015	28.9	270	

Note: -

All Medium Temperature Tecumseh Units come complete with Accumulator, HPLP Control, Drier & Sight Glass Fitted, Fully Wired, Designed for Use with R404A.

All Medium Temperature Scroll Units come complete with HPLP Control, Drier & Sight Glass Fitted, Fully Wired, Designed for Use with R404A & R134A.

All Low Temperature Units come complete with Oil Separator, Accumulator, HPLP Control, Drier & Sight Glass, Designed for Use with R404A.

All Units with 2 x Fans Have HP Condenser Fan Control Fitted.

All Tecumseh 3 Phase Units include Contactors & Overloads

Prices and specification may change without notification. All prices are exclusive of GST and freight.

Dorin Jumbo Pack Units

Medium Temperature

Performance Data is Based on European Standard EN 12900

Stock Code	Compressor Model	HP	Disp m3/hr	Refrigerant	kW Capcities @ 30°C Ambient							Dimensions (mm)			List Price
					5	0	-5	-10	-15	-20	-25	W	D	H	
RJP0503MTY	H503CC	5	22	R404A	21.8	18.4	15.3	12.6	10.2	8.1	6.4	1560	750	1460	
				R134A	13.9	11.3	9.1	7.2	5.6	4.2					
RJP0750MTY	H751CC	7.5	31	R404A	31.4	26.3	21.9	18.0	14.6	11.7	9.2	1835	940	1575	
				R134A	20.2	16.4	13.2	10.5	8.2	6.3					
RJP1000MTY	H1001CC	10	48	R404A	39.4	33.0	27.3	22.4	18.2	14.5	11.4	1835	940	1575	
				R134A	24.4	19.9	15.9	12.6	9.8	7.4					
RJP1500MTY	H1501CC	15	48	R404A	49.6	41.7	34.6	28.5	23.2	18.6	14.7	2470	990	1695	
				R134A	30.8	25.1	20.2	16.0	12.5	9.6					
RJP2000MTY	H2001CC	20	56	R404A	57.4	48.2	40.1	33.0	26.9	21.6	17.1	2470	990	1695	
				R134A	36.2	29.4	23.5	18.6	14.4	11.0					
RJP2500MTY	H2500CC	25	75	R404A	73.2	61.3	50.9	41.8	34.0	27.2	21.4	3715	990	1695	
				R134A	48.6	39.3	31.4	24.7	19.0	14.2					
RJP3000MTY	H3000CC	30	85	R404A	82.3	69.0	57.4	47.2	38.4	30.9	24.4	3715	990	1695	
				R134A	55.0	44.6	35.7	28.1	21.8	16.5					
RJP3500MTY	H3500CC	35	102	R404A	109.8	91.9	76.3	62.7	50.9	40.8	32.1	3715	990	1695	
				R134A	72.9	59.0	47.1	37.0	28.5	21.4					

Low Temperature

Stock Code	Compressor Model	HP	Disp m3/hr	Refrigerant	kW Capcities @ 30°C Ambient							Dimensions (mm)			List Price
					-10	-15	-20	-25	-30	-35	-40	W	D	H	
RJP0503LTY	H503CS	5	26	R404A	14.8	12.1	9.8	7.8	6.1	4.7	3.4	1560	750	1460	
RJP0750LTY	H751CS	7.5	38	R404A	20.8	17.0	13.6	10.8	8.4	6.3	4.6	1560	750	1460	
RJP1000LTY	H1001CS	10	48	R404A	28.7	23.3	18.7	14.8	11.4	8.6	6.2	1560	750	1460	
RJP1500LTY	H1501CS	15	56	R404A	32.9	26.8	21.6	17.0	13.2	9.9	7.1	1835	940	1575	
RJP2000LTY	H2000CS	20	75	R404A	42.4	34.6	27.9	22.1	32.7	13.1	9.5	1835	940	1575	
RJP2500LTY	H2500CS	25	85	R404A	47.5	38.8	31.3	24.9	19.4	14.7	10.6	2470	990	1695	
RJP3000LTY	H3000CS	30	113	R404A	63.4	57.0	41.5	32.9	25.5	19.2	13.9	2470	990	1695	
RJP3500LTY	H3500CS	35	127	R404A	69.7	56.9	45.8	36.3	28.1	21.2	15.3	2470	990	1695	

Jumbo Pack Units come complete with: -

Dorin Compressor
Alco Fan Speed Controller
Danfoss HPLP Control
Suction Accumulator
Oil Separator
Castel Relief Valve
Liquid Filter Drier
Liquid Sight Glass
Fully Wired

Prices and specification may change without notification. All prices are exclusive of GST and freight.

Tecumseh Hermetic Compressors

R134A Medium Temperature

220/240 Volt 50 Hz Single Phase

Stock Code	Model	Nominal HP	Nominal Capacity (Watts)			Disp	Height	List Price
			-5°C	0°C	5°C	cc	(mm)	
CH0021	CAE4440Y	1/3	753	959	1197	12	210	
CH0001	CAJ4461Y	1/2	1148	1463	1829	18.3	268	
CH0002	CAJ4492Y	3/4	1631	2121	2673	25.9	281	
CH0013	CAJ4511Y	1	2220	2834	3534	32.7	292	
	FH4518Y	1 1/2	3183	4199	5328	53.2	348	

R404A Medium Temperature

220/240 Volt 50 Hz Single Phase

CH0014	CAJ9510Z	1	1761	2184	2673	18.3	292	
CH0003	CAJ9513Z	1 1/8	2153	2729	3393	24.2	292	
CH0011	CAJ4517Z	1 1/4	2459	3070	3783	25.9	292	
CH0004	CAJ4519Z	1 1/2	3274	4054	4961	34.4	292	
CH0015	FH4524Z	2	3780	4802	5975	43.5	372	
CH0016	FH4531Z	2 1/2	5087	6387	7839	56.6	388	

380/440 Volt 50 Hz Three Phase

CH0008	TFH4540Z	3	6433	7981	9773	74.2	388	
CH0017	TAG4546Z	3 3/4	8125	10267	12746	90.2	396	
CH0009	TAG4561Z	5	8880	11442	14473	112.5	409	
CH0018	TAG4573Z	6	11300	14314	17835	134.8	421	

R404A Low Temperature

220/240 Volt 50 Hz Single Phase

			-30°C	-25°C	-20°C			
CH0005	CAJ2464Z	1 1/2	1372	1883	2452	35.4	292	
CH0006	FH2480Z	2	1819	2464	3204	53.2	388	
CH0007	FH2511Z	3	2476	3341	4348	74.3	388	

380/440 Volt 50 Hz Three Phase

CH0010	TFH2511Z	3	2476	3341	4348	74.3	372	
CH0019	TAG2516Z	4	3816	5133	6766	112.5	396	
Ch0020	TAG2522Z	5	4921	6473	8430	134.8	421	

All Ratings are at a Condensing Temperature of 40°C

Prices and specification may change without notification. All prices are exclusive of GST and freight.

Dorin Compressors

R134A / R404A Medium Temperature

Performance Data is Based on European Standard EN 12900

Stock Code	Model	HP	Disp m3/hr	Refrigerant	kW Capacities @ 45°C Condensing				Compressor Amps		List Price
					5	0	-5	-25	MAX	L R A	
CDH350CC	H350CC	3.5	15.9	R404A	13.6	11.4	9.5	4.0	9.4	43.6	
				R134A	8.7	7.0	5.6				
	H380CC	3.8	17.5	R404A	15.0	12.5	10.2	4.5	9.4	43.6	
				R134A	9.5	7.7	6.2				
CDH503CC	H503CC	5	22.8	R404A	19.9	16.7	13.9	5.7	13.5	63.1	
				R134A	13.1	10.6	8.5				
	H700CC	7	27.3	R404A	23.9	20.0	16.6	6.9	17.5	86	
				R134A	15.6	12.7	10.2				
	H750CC	7.5	33.5	R404A	28.7	24.0	19.9	8.3	17.5	86	
				R134A	18.9	15.4	12.3				
CDH1001CC	H1001CC	10	38.6	R404A	36.0	36.0	24.9	10.2	22	109	
				R134A	22.9	18.6	14.9				
CDH1501CC	H1501CC	15	48.8	R404A	45.5	38.1	31.5	13.1	34	171	
				R134A	29.0	23.6	18.9				
	H2001CC	20	57	R404A	52.6	44.1	36.6	15.4	38	177	
				R134A	33.9	27.5	21.9				
	H2500CC	25	75	R404A	67.0	56.0	46.5	19.5	48	203	
				R134A	45.3	36.6	29.1				
	H3000CC	30	85	R404A	75.5	63.2	52.5	22.1	56	224	
				R134A	51.3	41.6	33.2				
	H3500CC	35	102	R404A	100.5	84.0	69.6	29.1	60	230	
				R134A	68.0	54.9	43.7				

R404A Low Temperature

					-15	-20	-25	-40			
CDH350SB	H350SB	3.5	17.5	R404A	7.0	5.6	4.5	1.9	7.5	34.1	
	H380SB	3.8	19.5	R404A	7.9	6.3	5.1	2.3	7.5	34.1	
CDH503CS	H503CS	5	26.4	R404A	11.1	8.9	7.1	2.7	12.9	63.1	
	H700CS	7	31.8	R404A	13.0	10.4	8.1	3.2	16.7	86	
CDH750CS	H750CS	7.5	38.2	R404A	15.4	12.3	9.7	4.0	16.7	86	
CDH1000CS	H1000CS	10	48.8	R404A	21.2	16.9	13.3	5.4	25	135	
CDH1500CS	H1500CS	15	56.9	R404A	24.4	19.5	15.4	6.2	34	171	
	H2000CS	20	75.8	R404A	31.5	25.3	20.0	8.3	38	177	
	H2500CS	25	85	R404A	35.4	28.5	22.6	9.4	45	203	
	H2900CS	29	102	R404A	42.3	33.9	26.8	11.1	56	224	
	H3500CS	35	127	R404A	52.0	41.8	33.0	13.5	56	224	

Prices and specification may change without notification. All prices are exclusive of GST and freight.

Compressor Accessories

	Stock Code	Vendors Code	Description	Unit	List Price
			Start Relays / Capacitors		
	ER0001	ICG220	Solid State Relay 1/12 - 1/2HP	EACH	
	ER0002	PO230	Solid State Relay 1/12 - 1/2HP - Push on type	EACH	
	ER0003	RO82	Relay & Overload 1/12 - 1/8HP	EACH	
	ER0004	RO62	Relay & Overload 1/6 - 1/5HP	EACH	
	ER0005	RO42	Relay & Overload 1/4 - 1/3HP	EACH	
	ER0006	URSC20	Solid State Relay & Pre-wired Start Capacitor - Prevents low voltage starting problems	EACH	
	ER0007	RCO820	3 in 1 Start Relay 1/12 - 1/8HP	EACH	
	ER0008	RCO620	3 in 1 Start Relay 1/6 - 1/5HP	EACH	
	ER0009	RCO420	3 in 1 Start Relay 1/4 -1/3HP	EACH	
	ER0010	SPP5	Starter Power Pack - Used to increase start torque by 300% on 1/2 - 10HP single phase compressors	EACH	

Prices and specification may change without notification. All prices are exclusive of GST and freight.

Condensers

Series	MODEL	CAPACITY IN kW AT 15KTD								Price
		R404A		R134A		R407C		R22		
		Low Speed	High Speed	Low Speed	High Speed	Low Speed	High Speed	Low Speed	High Speed	
C1-SERIES										
C1 SERIES	C1 - 010		9.6		9.2		8.1		9.34	
	C1 - 011		11.0		10.6		9.3		10.65	
	C1 - 012		12.3		11.7		10.2		11.7	
	C1 - 017	15.5	17.1		16.8		14.8	15.2	16.89	
	C1 - 020	18.0	20.0		19.6		17.1	17.5	19.58	
	C1 - 023	20.7	23.1		20.0		19.3	19.7	22.15	
	C1 - 025	22.7	25.4		24.6		21.6	22.1	24.87	
	C1 - 029	26.1	29.4		28.9		25.2	25.4	28.71	
	C1 - 035	30.8	34.7		33.4		29.0	29.4	33.14	
	C1 - 049	38.3	49.0	37.5	47.9	32.8	42.3	37.6	48.52	
	C1 - 059	44.5	58.6	43.4	57.2	37.8	50.3	43.3	57.6	
	C1 - 070	50.5	70.1	48.2	66.4	41.9	58.7	48.2	67.53	
	C1 - 095	74.7	95.0	73.4	93.4	64.1	82.3	73.6	94.46	
	C1 - 114	87.1	113.9	85.2	111.8	74.2	98.0	85.0	112.48	
	C1 - 137	99.6	137.4	95.3	130.8	82.7	115.4	95.3	132.9	
	C1 - 172	131.8	172.3	124.3	158.9	109.3	142.5	126.0	164.26	
	C1 - 207	149.2	207.1	141.9	194.2	123.1	171.1	141.8	197.14	
	C1 - 228	174.3	227.9	170.4	223.6	148.3	196.1	170.0	224.96	
	C1 - 275	199.2	274.7	190.6	261.7	165.5	230.8	190.6	265.81	
	C1 - 345	263.6	344.6	248.6	317.8	218.6	284.9	252.1	328.51	
	C1 - 414	298.4	414.2	283.7	388.4	246.2	342.1	283.6	394.27	
	C1 - 471	355.7	471.5	333.5	434.9	290.6	384.9	333.2	441.41	
	C1 - 550	399.7	550.0	366.3	486.4	322.4	441.0	372.2	508.34	
	C1 - 599	451.9	598.7	413.0	536.7	367.8	486.6	423.0	559.66	
	C1 - 711	506.3	710.8	469.7	647.1	410.6	576.8	471.9	662.9	
	C1 - 858	612.3	858.4	563.0	773.4	495.0	694.2	570.0	799.16	
	C1 - 1000	716.3	1000.4	653.8	888.3	577.7	806.7	666.0	929.13	
	C1 - 1135	817.7	1134.7	738.9	989.0	658.0	912.2	759.0	1050.55	

GREENHALGH

 Prices and specification may change without notification. All prices are exclusive of GST and freight.

Tools, Hoses

	Stock Code	Description	List Price
		Charging Hoses	
	YJ21036	Yellow Jacket HAV-36" Yellow Hose 1/4"	
	YJ21060	Yellow Jacket HAV-60" Yellow Hose 1/4"	
	YJ21072	Yellow Jacket HAV-72" Yellow Hose 1/4"	
	YJ21236	Yellow Jacket HAV-36" Blue Hose 1/4"	
	YJ21260	Yellow Jacket HAV-60" Blue Hose 1/4"	
	YJ21272	Yellow Jacket HAV-72" Blue Hose 1/4"	
	YJ21636	Yellow Jacket HAV-36" Red Hose 1/4"	
	YJ21660	Yellow Jacket HAV-60" Red Hose 1/4"	
	YJ21672	Yellow Jacket HAV-72" Red Hose 1/4"	
	YJ21405	Yellow Jacket 60" Yellow Hose 1/4" x 5/16" (A) - R410a	
	YJ21423	Yellow Jacket 36" Blue Hose 1/4" x 5/16" (A) - R410a	
	YJ21425	Yellow Jacket 60" Blue Hose 1/4" x 5/16" (A) - R410a	
	YJ21463	Yellow Jacket 36" Red Hose 1/4" x 5/16" (A) - R410a	
	YJ21465	Yellow Jacket 60" Red Hose 1/4" x 5/16" (A) - R410a	
	YJ29463	Yellow Jacket 36" Red Hose 1/4" x 5/16" Angle Ball Valve - R410a	
	YJ29423	Yellow Jacket 36" Blue Hose 1/4" x 5/16" Angle Ball Valve - R410a	
	YJ21505	Yellow Jacket 60" Yellow Hose 5/16" x 5/16" (A) - R410a	
	YJ21525	Yellow Jacket 60" Blue Hose 5/16" x 5/16" (A) - R410a	
	YJ21565	Yellow Jacket 60" Red Hose 5/16" x 5/16" (A) - R410a	
	YJ15636	Yellow Jacket BC-36" Heavy Duty Hose 3/8" Black	
	YJ15660	Yellow Jacket BC-60" Heavy Duty Hose 3/8" Black	
	YJ18160	Yellow Jacket BBA-60" Charging Hose 3/8" Yellow	
	YJ29483	Yellow Jacket 36" Set of 3 Charging Hoses 1/4" x 5/16" Angle Ball Valve	
	YJ29983	Yellow Jacket 36" Set of 3 Charging Hoses 1/4" x 1/4" Angle Ball Valve	

Prices and specification may change without notification. All prices are exclusive of GST and freight.

Tools, Gauges

	Stock Code	Description	List Price
		Gauges	
	YJ49045	Yellow Jacket Hi Side Solar Gauge/Bar Deg C	
	YJ49046	Yellow Jacket Lo Side Solar Gauge/Bar Deg C	
		Light-powered pressure gauges operate continuously, even in low light conditions. Eliminate battery	
		replacement costs and loss of power during jobs	
		Automatic pressure-temperature readout for R-22, R-134a, R-404A, R-407C, R-410A, R-422D, R-427A and R-507	
	YJ49033	Yellow Jacket 65mm Red Hi Side Gauge 22/134A/404A C Bar/Psi	
	YJ49034	Yellow Jacket 65mm Blue Lo Side Gauge 22/134A/404A C Bar/Psi	
	YJ49107	Yellow Jacket 80mm Red Hi Side Gauge 22/134A/404A C/F KPa/Psi	
	YJ49108	Yellow Jacket 80mm Blue Lo Side Gauge 22/134A/404A C/F KPa/Psi	
	YJ49053	Yellow Jacket 65mm Red Hi Side Gauge 410a C MPa/Psi	
	YJ49054	Yellow Jacket 65mm Blue Lo Side Gauge 410a C MPa/Psi	
	YJ49109	Yellow Jacket 80mm Red Hi Side Gauge 410A KPa/Psi	
	YJ49110	Yellow Jacket 80mm Blue Lo Side Gauge 410A KPa/Psi	
	YJ49149	Yellow Jacket 65mm Red Hi Side Gauge 600a C/F kPa/PSI/Bar	
	YJ49150	Yellow Jacket 65mm Blue Lo Side Gauge 600a C/F kPa/PSI/Bar	
		Liquid Filled Gauges	
	YJ49519	Yellow Jacket 90mm Red Hi Side Gauge R410a C/F PSI/Bar	
	YJ49520	Yellow Jacket 90mm Blue Lo Side Gauge R410a C/F PSI/Bar	
	YJ49521	Yellow Jacket 90mm Red Hi Side Gauge 134a/404a/407c C/F PSI/Bar	
	YJ49522	Yellow Jacket 90mm Blue Lo Side Gauge 134a/404a/407c C/F PSI/Bar	
		Gauge Boots	
	YJ49087	Yellow Jacket Red Gauge Boot For Digital Gauges	
	YJ49088	Yellow Jacket Blue Gauge Boot For Digital Gauges	
	YJ49091	Yellow Jacket Red 2-1/2 Gauge Boot	
	YJ49092	Yellow Jacket Blue 2-1/2 Gauge Boot	
	YJ49191	Yellow Jacket Red 3-1/8 Gauge Boot	
	YJ49192	Yellow Jacket Blue 3-1/8 Gauge Boot	
	YJ49100	Yellow Jacket 3.1/8 Gauge Crystal	

Tools, Gauge Sets, Adapters

	Stock Code	Description	List Price
		Manifold Sets	
	YJ49811	Yellow Jacket 2-Valve Titan Manifolds W/ 60 Plus II Hoses 22/134A/404A	
	YJ49815	Yellow Jacket 2-Valve Titan Manifolds No Hoses 410A	
	YJ49911	Yellow Jacket 4-Valve Titan Manifolds W/ 60 Plus II Hoses 22/134A/404A	
	YJ49915	Yellow Jacket 4-Valve Titan Manifolds No Hoses 410A	
	YJ41855	Yellow Jacket 41 Series Brass Manifolds W/ 60 Plus II Hoses 22/134A/404A	
	YJ41863	Yellow Jacket 41 Series Brass Manifolds No Hoses 5/16-1/4-5/16 R410a	
	YJ41866	Yellow Jacket 41 Series Brass Manifolds No Hoses 1/4-1/4-1/4 R600a	
	YJ46140	Yellow Jacket Brute II 4V R22/134A/404A Manifold no hoses	
	YJ40325	3-Port Single Gauge Charging Valve - no gauge included	
	YJ40815	Refrigeration System Analyzer, standard with the TITAN™ 4-valve manifold, external, replaceable vacuum sensor; battery holder; and a boot, bumper, plug and sensor/probe boots, all in a blow-molded instrument case.	

		Charging Tools	
	YJ18975	1/4" 4-in-1 ball valve tool is perfect for vacuum, charge, cores and recovery. Remove and replace Schrader cores without losing charge. With side port	
	YJ18985	5/16" 4-in-1 ball valve tool is perfect for vacuum, charge, cores and recovery. Remove and replace Schrader cores without losing charge. With side port	
	YJ18978	1/4" Schrader Re-Threading Tool	
	YJ18988	5/16" Schrader Re-Threading Tool	
	YJ18997	1/4" Grappler Rod/Nut Assembly	
	YJ18987	5/16" Grappler Rod/Nut Assembly	
	YJ19121	5/16" Quick Coupler with adjustable valve opener Str. x 1/4" Male flare	
	YJ19122	1/4" Quick Coupler with adjustable valve opener Str. x 5/16" Male flare	
	YJ19165	1/2" Acme Female x 1/4" Male flare	
	YJ41123	1/4" Liquid Charging Adapter	
	YJ41124	5/16" Liquid Charging Adapter	
	YJ41337	Automotive R134a Hi Side Coupler 1/4" MF	
	YJ41338	Automotive R134a Lo Side Coupler 1/4" MF	

Prices and specification may change without notification. All prices are exclusive of GST and freight.

Tools, Electronic, Vacuum Pumps

	Stock Code	Description	List Price
		Vacuum Gauges	
	YJ69075	Yellow Jacket Full Range Micron Gauge	
	YJ69045	Yellow Jacket 80mm Mechanical Vacuum Gauge 1000-0 mill. & 30-0"	
	YJ69086	Yellow Jacket Handheld Vacuum Gauge Kit	
	YJ69073	Yellow Jacket Sensor For 69070 & 69075	
	YJ69071	Yellow Jacket Micron Gauge Coupler	
	YJ69087	Yellow Jacket Replacement Sensor for 69086	
	YJ69067	Yellow Jacket Ball Valve For Sensor	
	YJ69088	Yellow Jacket Replacement Cable (69086)	
	YJ40819	YJ Replacement Cable newer version	
		- for handheld vauum gauge 69086	
		Scales	
	YJ68800	Yellow Jacket 50Kg Platform Scale	
	YJ68810	Yellow Jacket 100Kg Platform Scale	
	YJ68805	Yellow Jacket 230V Upgrade Kit W/Module	
		Vacuum Pumps	
	TP0042	Vacuum Pump 42l/m 1.5cfm	
	YJ93544	Yellow Jacket Superevac Pump - 95 L/M	
	YJ93564	Yellow Jacket Superevac Pump - 142 L/M	
	YJ95768	Yellow Jacket Recover-XLT Au/Nz Model	

Prices and specification may change without notification. All prices are exclusive of GST and freight.

Tools, Benders, Expanders, Flaring, Cutters

	Stock Code	Description	List Price
		Benders	
	TH0100	3-in-1 Tube Bender 1/4 - 3/8	
	TH0106	Tube Bender 1/4	
	TH0109	Tube Bender 3/8	
	TH0112	Tube Bender 1/2	
	TH0116	Tube Bender 5/8	
	TH0119	Tube Bender 3/4	
	YJ60375	Yellow Jacket Tube Bender 3/8	
	YJ60377	Yellow Jacket Tube Bender 1/2	
	YJ60378	Yellow Jacket Tube Bender 5/8	
	YJ60379	Yellow Jacket Tube Bender 3/4	
	YJ60331	Yellow Jacket Ratchet Hand Bender Kit 1/4 - 7/8	
	TH0126	Tube Bending Spring 1/4	
	TH0129	Tube Bending Spring 3/8	
	TH0132	Tube Bending Spring 1/2	
	TH0136	Tube Bending Spring 5/8	
	TH0139	Tube Bending Spring 3/4	
		Tube Expanders	
	YJ60407	Yellow Jacket Expander kit with handles; heads for 3/8, 1/2, 3/4, 7/8, 1-1/8 ; deburring tool, carrying case, instructions	
	YJ60493	Yellow Jacket Hydraulic expander kit: heads for 3/8, 1/2, 5/8, 3/4, 7/8, 1-1/8, 1-3/8, 1-5/8 plus small cutter, tube reamer, case and instructions	
	YJ60420	Yellow Jacket Expander Head 1.1/8	
	YJ60422	Yellow Jacket Expander Head 1.3/8	
	YJ60424	Yellow Jacket Expander Head 1.5/8	
		Flaring Tools	
	TH0001	Eccentric Flaring Tool 3/16 - 3/4	
	TH0004	Eccentric Flaring Tool - For Aluminium Tube	
	TH0150	Flaring & Swaging Kit 1/8 - 3/4	
	YJ60210	Yellow Jacket Heavy Duty Flaring Tool 3/16 - 5/8	
	YJ60250	Yellow Jacket Flaring/cutting kit for 3/16 to 5/8 with 60210 flaring tool, 60101 cutter, case	
	YJ60270	Yellow Jacket Flare/burnish tool for 3/16 to 5/8	
	YJ60440	Yellow Jacket Flare / Swage Kit 3/16 - 3/4	
		Tube Cutters	
	YJ60160	Yellow Jacket Small Mini Cutter 1/8 To 5/8	
	YJ60121	Yellow Jacket Mini Cutter 1/8 To 7/8	
	YJ60101	Yellow Jacket Small Premium Cutter 1/8 To 1-1/8	
	YJ60102	Yellow Jacket Large Premium Cutter 1/4 To 1-5/8	
	YJ60139	Yellow Jacket Large Tube Cutter 3/8 to 2.5/8	
	YJ60146	Yellow Jacket Large Tube Cutter 2 to 5.1/8	
		Deburring Tool	
	YJ60163	Yellow Jacket Deburring Tool	
	YJ60164	Yellow Jacket Blade For 60163	
	YJ60166	Economy Deburring Tool	

Prices and specification may change without notification. All prices are exclusive of GST and freight.

Tools, Leak Detectors, Analyser, Thermometers

	Stock Code	Description	List Price
		Leak Detectors	
	YJ69339	Yellow Jacket AccuProbe UV - Au/NZ	
	YJ69354	Yellow Jacket Heated AccuProbe ll- Au/NZ	
	YJ69373	YJ Combustible Gas Detector with case	
	YJ69384	Yellow Jacket Replacement Sensor & Filt	
	YJ69385	Yellow Jacket Sensor Filters (Pack of 5)	
		Oil Pumps	
	YJ77940	Yellow Jacket Max-Flow Combination Pump	
		Refrigerant Analyser	
	YJ68945	Yellow Jacket Refrigerant Analyser	
	YJ68949	Yellow Jacket AC Power Adapter - Identifier	
		Dispersive infrared technology	
		quickly determines the weight concentrations of R-12, R-22, R-134a, hydrocarbons and air • Analytical software identifies EPA SNAP approved blends, as well as illegal replacements and blends including propane and butane • Quickly and automatically determines purity of R-12, R-22 and R-134a to help eliminate potential of human error • Large, easy-to-read graphing display • Rechargeable battery lasts all day • Rugged portable case includes R-12 hose with 1/4" flare and R-134a hose with auto coupler	
		Thermometers	
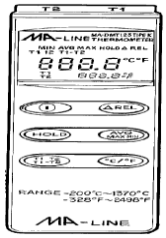	MA-DMT123	Dual Probe Thermometer -200C/+1370C	
	MA-DMT123KIT	Dual Probe Thermometer -200C/+1370C Kit	
		- c/w 2 x Clamp Probes, 2 x Standard Probes, in case	
	MA-DMTK	Temperature Probe K-Type	
	MA-12355	Clamp-On Sensor 1-3/8" Jaw K-Type	
	MA-12357	K-type Strap on Probe	
	YJ69107	Yellow Jacket Digital Stick Thermometer -50/+150 C	

Prices and specification may change without notification. All prices are exclusive of GST and freight.

Tools, Spares

	Stock Code	Description	List Price
		Yellow Jacket Spares	
	YJ18001	Yellow Jacket Cylinder Valve Hose Gasket	
	YJ19005	Yellow Jacket CH20 Gasket	
	YJ19011	Yellow Jacket CH11 Gasket	
	YJ19015	Yellow Jacket CH-80 Gasket	
	YJ19021	Yellow Jacket 1/8 In. Gasket	
	YJ19037	Yellow Jacket Sealright O-Rings	
	YJ19038	Yellow Jacket 1/4 Sealright Seal Kit	
	YJ19039	Yellow Jacket 1/4 Sealright Nut W/Clip	
	YJ19301	Yellow Jacket CH-75 Depressor	
	YJ19302	Yellow Jacket CH14 Depressor	
	YJ19304	Yellow Jacket 3/16 In. Depressor	
	YJ60072	Yellow Jacket New Cutter Wheel - 60121	
	YJ60074	Yellow Jacket New Pin/Screw - 60121	
	YJ60077	Yellow Jacket Indiv Reamer Screw/Spacer	
	YJ60078	Yellow Jacket Individual Reamer	
	YJ60079	Yellow Jacket Indiv. Pin & Clip - 60101	
	YJ60080	Yellow Jacket 60121 Blade Screw	
	YJ60081	Yellow Jacket Individual 26883 Screw	
	YJ60082	Yellow Jacket Individual 74762 Screw	
	YJ60083	Yellow Jacket Individual 77511 Screw	
	YJ60098	Yellow Jacket Blade For Stainless	
	YJ60100	Yellow Jacket Blades For 60101 & 60102	
	YJ60101	Yellow Jacket Prem. Cutter 1/8 To 1-1/8	
	YJ60102	Yellow Jacket Prem. Cutter 1/4 To 1-5/8	
	YJ60106	Yellow Jacket Constrictor Wheel	
	YJ60108	Yellow Jacket Screw For Knob	
	YJ60110	Yellow Jacket Repl Imperial 32633 Blade	
	YJ60111	Yellow Jacket Repl Imperial 75015 Blade	
	YJ60112	Yellow Jacket Repl Imperial 75046 Blade	
	YJ60113	Yellow Jacket Repl Imperial 74761 Blade	
	YJ60120	Yellow Jacket Cutter Wheel 60121/60142	
	YJ60124	Yellow Jacket Blades For 60123 & 60139	
	YJ60125	See 60080	
	YJ60130	Yellow Jacket Cutter Parts Kit	
	YJ60136	Yellow Jacket Ind. Screw/Retain - 60139	
	YJ60141	Yellow Jacket Cutter Wheel Screw - 60146	
	YJ60144	Yellow Jacket Indiv. Pin & Clip - 60142	
	YJ60147	Yellow Jacket Cutter Wheel - 60146	
	YJ77941	Yellow Jacket Stopper For 77940 Pump	
	YJ77942	Yellow Jacket Seal Kit For 77940	

Prices and specification may change without notification. All prices are exclusive of GST and freight.

Tools, Gauge set spares

Stock Code	Description	List Price
	Yellow Jacket Spares	
YJ41041	YJ Titan Yellow Handle	
YJ41042	YJ Titan Blue Handle	
YJ41043	YJ Titan Piston Assembly	
YJ41044	YJ Titan Red Handle	
YJ41049	YJ Titan Valve Nut	
YJ41061	YJ Sight Glass Assy-Titan/II	
YJ41087	YJ Brute Piston O-Ring	
YJ41090	YJ Brute II Handle Screws	
YJ41091	YJ Brute II Yellow Handle	
YJ41092	YJ Brute II Blue Handle	
YJ41094	YJ Brute II Red Handle	
YJ41096	YJ Brute II Retaining Nut	
YJ41103	YJ 3/8 Piston Assy - Brute /II	
YJ41106	YJ Feed Screw - Brute/II	
YJ41131	YJ Manifold O-Ring Series 41	
YJ41133	YJ 1/4 Valve Piston Complete 41/Titan	
YJ41134	YJ Valve Feed Screw 41/Titan	
YJ41135	YJ Valve Retaining Nut 41/Titan	
YJ93047	YJ Pump Drive Coupling	

Tools, Bags

	Stock Code	Description	List Price
		Tool Bags	
	PPVETOTECHLC	HVACR Technicians Large Tool Bag Model TECH-LC	
		With 53 pockets, ample pocket room for	
		hand tools, parts box(es), meter(s),	
		a cordless impact drill and other bulkier items.	
		8 small neoprene pockets allow safe storage	
		for drill bits and bit extensions.	
	PPVETOMB	HVACR Technicians Test Meter Tool Bag MB	
		The MB is a clip-on meter bag designed	
		to hold a small selection of tools	
		and one or two meters.	
		When not in use it can clip onto	
		any model Veto bag's tape clip or D-Rings.	
		It features 10 pockets of various sizes that will	
		accommodate a number of meters and	
		a few of the most commonly used tools	
		to diagnose and repair problems on service calls	
	PPVETOTP3	HVACR Technicians Diagnostics Tool Bag TP3	
		The TP3 is a clip-on diagnostics bag designed	
		to hold a meter and a variety of tools.	
		When not in use it can clip onto any model	
		Veto tool bag's tape clip or D-Rings.	
		It features 15 pockets of various sizes that will	
		accommodate the most commonly used tools	
		to diagnose and repair problems on service calls.	
		Miscellaneous	
	TM0002	Round Inspection Mirror , 57mm	
		Telescoping handle 235 - 362mm	
		Torque Wrenches	
	TH0002	Special Torque Wrench, for 1/4" Aluminium Tube Flare Nuts. Fixed Setting	
	TH0003	Special Torque Wrench, for 3/8" Aluminium Tube Flare Nuts. Fixed Setting	
		Service Wrenches	
	YJ60616	Yellow Jacket Offset, Square 1/4x3/16 at one end; 3/8x5/16 at other.	
	YJ60615	Yellow Jacket Square 3/8 one end, Square 1/2 at other end	
	YJ60618	Yellow Jacket Heavy Duty, Square 3/16x1/4 at one end; 3/8x5/16 at other end.	

Refspecs Coolroom & Freezer Design Data

Heat Load Tables

2°C Coolrooms

Based on: -
28°C Ambient Temperature
100mm Polystyrene Panel, Concrete Floor

16 Hours/Day Compressor Operation
Design Usage Factor = Average 1.2, Heavy 2.0
Design Storage Humidity = 85% RH

External Dimensions - m				Heat Load - Watts					
Length	Width	Height	Internal Volume m³	Average Usage	Suggested Condensing Unit	Suggested Evaporator	Heavy Usage	Suggested Condensing Unit	Suggested Evaporator
1.8	1.2	2.4	3.52	883	RCUY050M	HEJ - 2D	1186	RCUY050M	HEJ - 2D
1.8	1.8	2.4	5.63	1089	RCUY050M	HEJ - 2D	1460	RCUY075M	HEJ - 3D
1.8	2.4	2.4	7.74	1277	RCUY075M	HEJ - 3D	1700	RCU100M	HEJ - 3D
2.4	2.4	2.4	10.64	1493	RCUY075M	HEJ - 3D	1979	RCU100M	HEJ - 4D
2.4	3.0	2.4	13.55	1695	RCU100M	HEJ - 3D	2232	RCU112M	HEJ-4D
2.4	3.6	2.4	16.45	1888	RCU100M	HEJ - 4D	2474	RCU112M	HEA2502D
3.0	3.0	2.4	17.24	1923	RCU112M	HEJ-4D	2520	RCU125M	HEA2502D
3.0	3.6	2.4	20.94	2141	RCU112M	HEA2502D	2792	RCU125M	HEA2503D
3.6	3.6	2.4	25.43	2384	RCU125M	HEA2503D	3090	RCU150M	HEA2503D
3.6	4.2	2.4	29.92	2618	RCU125M	HEA2503D	3375	RCU150M	HEA2503D
4.2	4.2	2.4	35.20	2874	RCU150M	HEA2503D	3687	RCU200M	HEA2503D

-18°C Freezers

Based on: -
28°C Ambient Temperature
150mm Polystyrene Panel, All Round

18 Hours/Day Compressor Operation
Design Usage Factor = Average 1.2, Heavy 2.0

External Dimensions - m				Heat Load - Watts					
Length	Width	Height	Internal Volume m³	Average Usage	Suggested Condensing Unit	Suggested Evaporator	Heavy Use	Suggested Condensing Unit	Suggested Evaporator
1.8	1.2	2.4	2.83	980			1314	RCU150L	HEJ - 3D
1.8	1.8	2.4	4.72	1206	RCU150L	HEJ - 3D	1621	RCU200L	HEJ - 4D
1.8	2.4	2.4	6.61	1406	RCU150L	HEJ - 4D	1885	RCU200L	HEA2502D
2.4	2.4	2.4	9.26	1637	RCU200L	HEJ - 4D	2189	RCU200L	HEA2503D
2.4	3.0	2.4	11.90	1848	RCU200L	HEA2502D	2464	RCU300L	HEA2503D
2.4	3.6	2.4	14.55	2048	RCU200L	HEA2502D	2720	RCU300L	HEA2503D
3.0	3.0	2.4	15.30	2087	RCU200L	HEA2503D	2770	RCU300L	HEA2504D
3.0	3.6	2.4	18.71	2309	RCU300L	HEA2503D	3056	RCUT400L	HEA2504D
3.6	3.6	2.4	22.86	2555	RCU300L	HEA2503D	3368	RCUT400L	HEA2504D
3.6	4.2	2.4	27.02	2792	RCU300L	HEA2504D	3666	RCUT400L	HEA3003D
4.2	4.2	2.4	31.94	3048	RCU300L	HEA2504D	3989	RCUT400L	HEA3003D

-20°C Freezers

Based on: -
28°C Ambient Temperature
150mm Polystyrene Panel, All Round

18 Hours/Day Compressor Operation
Design Usage Factor = Average 1.2, Heavy 2.0

External Dimensions - m				Heat Load - Watts					
Length	Width	Height	Internal Volume m³	Average Usage	Suggested Condensing Unit	Suggested Evaporator	Heavy Use	Suggested Condensing Unit	Suggested Evaporator
1.8	1.2	2.4	2.83	1018	RCU150L	HEJ - 3D	1362	RCU150L	HEJ - 3D
1.8	1.8	2.4	4.72	1253	RCU150L	HEJ - 3D	1684	RCU200L	HEJ - 4D
1.8	2.4	2.4	6.61	1463	RCU150L	HEJ - 4D	1957	RCU200L	HEA2502D
2.4	2.4	2.4	9.26	1700	RCU200L	HEJ - 4D	2272	RCU300L	HEA2502D
2.4	3.0	2.4	11.90	1920	RCU200L	HEA2502D	2557	RCU300L	HEA2503D
2.4	3.6	2.4	14.55	2130	RCU200L	HEA2502D	2826	RCU300L	HEA2503D
3.0	3.0	2.4	15.30	2166	RCU300L	HEA2502D	2875	RCUT400L	HEA2503D
3.0	3.6	2.4	18.71	2400	RCU300L	HEA2503D	3173	RCUT400L	HEA2503D
3.6	3.6	2.4	22.86	2656	RCU300L	HEA2503D	3499	RCUT400L	HEA2504D
3.6	4.2	2.4	27.02	2903	RCUT400L	HEA2503D	3806	RCUT400L	HEA2504D
4.2	4.2	2.4	31.94	3169	RCUT400L	HEA2504D	4141	RCUT500L	HEA3003D

Prices and specification may change without notification. All prices are exclusive of GST and freight.

REFSPECS
REFRIGERATION SPECIALTIES LTD

Refspecs Condensing Unit Comparisons

Medium Temperature R134A Single Phase

Refspecs Condensing Unit	Disp	HP	Capacity Watts @ -5°C		R E Condensing Unit	Disp	HP	Capacity Watts @ -5°C		Pattons Condensing Unit	Disp	HP	Capacity Watts @ -5°C		Heatcraft Condensing Unit	Disp	HP	Capacity Watts @ -5°C
RCUY038M	12	1/3	667		CAE4440YHR	12	1/3	667		UNE6187Z	12	1/3	750		BA12LMYB2	12.1	1/3	680
RCUY050M	18.3	1/2	1004		CAJ4461YHR	18.3	1/2	933		UT6215Z	20.4	1/2	1128		BA18LZB2	18	1/2	1210
RCUY075M	25.9	3/4	1513		CAJ4492YHR	25.9	3/4	1552		UNJ6220Z	26.2	3/4	1529		WJ26LZB2	26.8	3/4	1730
RCUY100M	32.7	1	1873		CAJ4511YHR	32.7	1	1917		UNJ6226Z	34.4	1	2035		WJ31MHYB3	30.5	1	2000
RCUY150M	53.2	1 1/2	2921		FH4518YHR	53.2	1 1/2	3026		CCNS140		1.4	2700		AW48MHYB5	48.1	1 1/2	3090

Medium Temperature R404A Single Phase

RCU100M	18.3	1	1834		CAJ9510ZMHR	18.3	1	1888		UT6220GK	17.4	5/8	1072		BA18MGB2	18	3/4	1900
RCU112M	24.2	1 1/8	2210		CAJ9513ZMHR	24.2	1 1/8	2178		UNJ9226GK	21.7	3/4	2094		WJ22MHGB2	21.5	7/8	2330
RCU125M	25.9	1 1/4	2792		CAJ4517ZHR	25.9	1 1/4	2792		UNJ9232GK	26.2	1 1/4	2550		WJ26MHGB3	26.8	1	2820
RCU150M	34.4	1 1/5	3533		CAJ4519ZHR	34.4	1 1/2	3452		UNJ9238GK	32.7	1 1/2	3157		AW38MGB3	37.5	1 1/2	3570
RCU200M	40.8	2	3844		FH4524ZHR	43.5	2	3768		CCKS200	44.4	2	3380		AW43MHGB3	43.1	2	4410
RCU250M	56.6	2 1/2	5169		FHS4531ZHR	56.6	2 1/2	5169							AW54MGB5	53.5	2 1/2	5120

Medium Temperature R404A Three Phase

RCUT300M	72.1	3	6475		TFHS4540ZHR	74.2	3	6136		CCK300	74.3	3	6460		PCH059MHA1-2			6120
RCUT375M	90.2	3 3/4	7949							CCK400	92.4	4	8370		PCH072MHA1-2			7460
RCUT500M	112.5	5	9733		TAG4561ZHR	112.5	5	9544		CCK500	106.2	5	9990		PCH096MHA1-2			9980
RCUT625M	134.8	6 1/4	11596		RMTXZ600	134.8	6	11801							PCH112MHA1-2			11640

Low Temperature R404A Single Phase Capacity @ -25°C

RCU150L	35.4	1 1/2	1434		CAJ2464ZBR	35.4	1 1/2	1463		UNJ2212GK	34.4	1 1/2	1479		AW43LMYB3	43.1	1 1/4	2040
RCU200L	53.2	2	2069		FH2480ZBR	53.2	2.0	2030		CCNS180	61.4	1 3/4	2090		AW54LZB3	53.5	1 1/2	2180
RCU300L	74.3	3	2682		FH2511ZBR	74.3	3.0	2810										

Low Temperature R404A Three Phase Capacity @ -25°C

RCUT300L	74.3	3	2682		TFH2511ZBR	74.3	3	2810		CCN200	74.3	3.0	2500		AH-230E-L-3		2.3	2680
RCUT400L	112.5	4	3997		RLTZ400	112.5	4	3723		CCN330	106.2	3.3	3890		AH-330E-L-3		3.3	4070
RCUT500L	134.8	5	4988		RLTZ500	134.8	5	4737							AH-420E-L-3		4.2	6040

Prices and specification may change without notification. All prices are exclusive of GST and freight.

REFSPECS
REFRIGERATION SPECIALTIES LTD

Refspecs Evaporator Comparisons

Refspecs MT / LT Evaporators	Evaporator Capacity Watts MT / LT		R E Med Temp Evaporators	Capacity Watts @ 6KTD	R E Low Temp Evaporators	Capacity Watts @ 6KTD		Patton Med Temp Evaporators	Capacity Watts @ 6KTD	Patton Low Temp Evaporators	Capacity Watts @ 6KTD		Heatcraft Med Temp Evaporators	Capacity Watts @ 6KTD	Heatcraft Low Temp Evaporators	Capacity Watts @ 6KTD
HEJ-1D	570 / 484		RCT160	408	RCT 160L	345		SM06	670	SL045	435		KC550	570	KF450	470
HEJ-2D	1132 / 962		RCT 350	1142	RCT 350L	964		SM10	1110	SL105	1050		KC1001	1060	KF750	790
HEJ-3D	1702 / 1446							SM16	1650	SL120	1200		KC1700	1700	KF1380	1470
HEJ-4D	2257 / 1918		RCT 540	2021	RCT 540L	1707							KC2100	2100	KF1650	1710
HEA 3001D	1789 / 1508		NM117	1690	NL115	1455		BM15	1530	BL14	1410		KMT016	1620	KLT015	1470
HEA 2502D	2487 / 2091		NM124	2370	NL120	2040		BM22	2250	BL20	1980		KMT027	2700	KLT024	2400
HEA 3002D	3603 / 3006							BM37	3750	BL27	2820		KMT034	3400	KLT030	3000
HEA 2503D	3645 / 3068		NM240	3950	NL234	3400		BM37	3750	BL27	2820		KMT038	3780	KLT030	3000
HEA 2504D	4867 / 4097		NM245	4520	NL239	3890		BM44	4410	BL38	3930		KMT051	5050	KLT042	4150
HEA 3003D	5501 / 4628		NM354	5450	NL347	4695		BM52	5250	BL42	4260		KMT060	5960	KLT045	4500
HEA 3004D	7239 / 6094		NM374	7400	NL364	6375		BM66	6690	BL56	5700		KMT067	6650	KLT062	6200
HEA 4502D	10023 / 8434		SM3105	10653	SL392	9179		PM105	10650	PL80	8250		KMT106	10600	KLT089	8900
HEA 4503D	14107 / 11914		SM4140	14204	SL4120	12239		PM140	14340	PL120	12300		KMT132	13200	KLT113	11300

Prices and specification may change without notification. All prices are exclusive of GST and freight.

REFSPECS
REFRIGERATION SPECIALTIES LTD
PH 09 582 0200

TC-940Ri Operating Parameters

FUN	Parameter Description	Min	Max	Units
F01	Password 123	—	—	—
F02	Control differential (Hysteresis)	0.1	20	°C
F03	Temperature reading offset (Probe calibration)	-5	5	°C
F04	Setpoint lock. Minimum setpoint allowed	-50	75	°C
F05	Setpoint lock. Maximum setpoint allowed	-50	75	°C
F06	Type of defrost (0=Elements, 1=Hot gas)	0	1	—
F07	Start defrost on time or temperature (0=Time, 1=Temp)	0	1	—
F08	Interval Between Defrost (Only if F07=0)	1	999	Min
F09	Maximum time the refrigeration can run without a defrost (Only if F07=1)	1	240	hour
F10	Start Temperature of defrost (Only if F07=1)	-50	75	°C
F11	The time S2 sensor must remain at the temperature set in F10 before defrosting	0	90	min
F12	Start Defrost when controller is powered up	0=No	1=Yes	—
F13	End defrost temperature (S2 Sensor)	-50	75	°C
F14	Maximum duration of defrost	0	90	—
F15	Fans on during defrost	0=No	1=Yes	—
F16	Delay of first defrost after controller power up (Only if F0=0)	0	999	Min
F17	Lock temperature display during defrost	0=No	1=Yes	
F18	Dripping Time	0	30	Min
F19	Start fan temperature after defrost (S2 Sensor)	-50	75	°C
F20	Fan delay after dripping time	0	3	Min
F21	Fans on with compressor	0=Yes	1=No	—
F22	High temperature fan cutout (S2 Sensor)	-50	75	°C
F23	Differential for starting fans after high tep cut out	0.1	20	°C
F24	Low temperature alarm (S1 Sensor)	-50	75	°C
F25	Low temperature alarm differential	0.1	20	°C
F26	High temperature alarm (S1 Sensor)	-50	75	°C
F27	High temperature alarm differential	0.1	20	°C
F28	Alarm delay after controller power up	0	999	Min
F29	Alarm delay after dripping time	0	999	Min
F30	Start delay on power up of controller	0	240	Min
F31	Minimum on time of compressor	0	999	Min
F32	Minimum off time of compressor	0	999	Min
F33	Compressor on or off with a faulty S1 sensor (Ambient)	0=Off	1=On	—

Basic parameters that need to be set. (Don't forget setpoint)

Modification Of The Set Point

Press & hold **Set** key for 2 sec and Release set when SEL is displayed.

Use the **Up** & **Down** keys to select the desired setpoint.

Press the **Set** Key to confirm new setpoint

Modification Of Parameters

Press & hold simultaneously the **Up** & **Down** Keys until FUN is displayed
Release the keys and wait until the first parameter FO1 is displayed.
Press the **Set** key and enter the password **123** using **Up** & **Down** keys
Confirm Password by pressing **Set.**
Use **Up** & **Down** keys to select next parameter then press **Set** to enter parameter
Use **Up** & **Down** keys to select desired value and press **Set** to confirm new setting.
Once parameter modification is completed press & hold the **Set** key until
- - - is displayed. The controller will now return to normal operation.

Activate A Manual Defrost

Press & hold **Up** key four 4 sec until DEF or REF is displayed

Release the Up key and controller will go into defrost.

Minimum & Maximum Temperatures

Press the **Up** key & T1 will be displayed followed by the maximum & minimum temperature for the S1 senor. T2 will then be displayed followed by the maximum & minimum temperature of the S2 sensor.

Alarm and Error Codes

ER1	Room temperature sensor (S1) is disconnected or out of specified range
ER2	Defrost temperature sensor (S1) is disconnected or out of specified range
ALO	Low temperature alarm. Check parameter F24
Ahi	Low temperature alarm. Check parameter F26
*	Flashes on right side of display. Defrost has ended on time and not temperature

REFSPECS
REFRIGERATION SPECIALTIES LTD
PH 09 582 0200

TC-940Ri Plus Operating Parameters

FUN	Parameter Description	Min	Max	Units	F.Set
F01	Password 123	—	—	—	—
F02	Control differential (Hysteresis)	0.1	20	°C	1.5
F03	Temperature reading offset (Room probe calibration)	-5	5	°C	0
F04	Temperature reading offset (Evaporator Probe calibration)	-5	5	°C	0
F05	Setpoint lock. Minimum setpoint allowed	-50	75	°C	-50
F06	Setpoint lock. Maximum setpoint allowed	-50	75	°C	75
F07	Type of defrost (0=Elements, 1=Hot gas)	0	1	—	0
F08	Start defrost on time or temperature (0=Time, 1=Temp)	0	1	—	0
F09	Interval Between Defrosts (Only if F07=0)	1	999	Min	240
F10	Maximum time the refrigeration can run without a defrost (Only if F07=1)	1	240	Hours	24
F11	Start Temperature of defrost (Only if F07=1)	-50	75	°C	-5
F12	The time S2 sensor must remain at the temperature set in F10 before defrosting	0	90	Min	10
F13	Start Defrost when controller is powered up	0=No	1=Yes	—	0
F14	End defrost temperature (S2 Sensor)	-50	75	°C	40
F15	Maximum duration of defrost	0	90	Min	45
F16	Fans on during defrost	0=No	1=Yes	—	0
F17	Delay of first defrost after controller power up (Only if F0=0)	0	999	Min	0
F18	Lock temperature display during defrost	0=No	1=Yes		0
F19	Dripping Time	0	30	Min	10
F20	Start fan temperature after defrost (S2 Sensor)	-50	75	°C	0
F21	Fan delay after dripping time	0	30	Min	1
F22	Fans on with compressor (0=Fans on with compressor only 1=Fans on always	0=Yes	1=No	—	1
F23	High temperature Evap fan cut out (S2 Sensor)	-50	75	°C	75
F24	Differential for starting fans after high temp cut out	0.1	20	°C	2
F25	Low temperature alarm (S1 Sensor)	-50	75	°C	-50
F26	Low temperature alarm differential	0.1	20	°C	1
F27	High temperature alarm (S1 Sensor)	-50	75	°C	75
F28	High temperature alarm differential	0.1	20	°C	1
F29	Alarm delay after controller power up	0	999	Min	0
F30	Alarm delay after dripping time	0	999	Min	0
F31	Configuration of digital input. (See TC 940RI Plus data sheet for options)	0	3	—	0
F32	Time delay for activation of door switch	0	99	Min	0
F33	Time for fans to run on after defrost start	0	99	Min	0
F34	Start delay on power up of controller	0	240	Min	0
F35	Minimum on time of compressor	0	999	Min	0
F36	Minimum off time of compressor	0	999	Min	0
F37	Compressor on or off with a faulty S1 sensor (Ambient)	0=Off	1=On	—	1
F38	Probe display speed (Larger the value longer the response time of the sensor S1)	0	9	—	0
F39	Network address for RS-485	0	247	—	1

Basic parameters that need to be set. (Don't forget setpoint)

F.Set = Factory Settings

Modification Of The Set Point

Press & hold **Set** key for 2 sec and Release set when SEL is displayed.

Use the **Up** & **Down** keys to select the desired setpoint.

Press the **Set** Key to confirm new setpoint

Modification Of Parameters

Press & hold simultaneously the **Up** & **Down** Keys until FUN is displayed
Release the keys and wait until the first parameter FO1 is displayed.
Press the **Set** key and enter the password **123** using **Up** & **Down** keys
Confirm Password by pressing **Set.**
Use **Up** & **Down** keys to select next parameter then press **Set** to enter parameter

Use **Up** & **Down** keys to select desired value and press **Set** to confirm new setting.
Once parameter modification is completed press & hold the **Set** key.
until - - - is displayed. The controller will now return to normal operation.

Activate A Manual Defrost

Press & hold **Up** key four 4 sec until DEF or REF is displayed
Release the Up key and controller will go into defrost.

Minimum & Maximum Temperatures

Press the **Up** key & T1 will be displayed followed by the maximum & minimum temperature for the S1 senor. T2 will then be displayed followed by the maximum & minimum temperature of the S2 sensor.

Alarm and Error Codes

ER1	Room temperature sensor (S1) is disconnected or out of specified range
ER2	Defrost temperature sensor (S1) is disconnected or out of specified range
ALO	Low temperature alarm. Check parameter F24
Ahi	Low temperature alarm. Check parameter F26
*	Flashes on right side of display. Defrost has ended on time and not temperature

REFSPECSS
REFRIGERATION SPECIALTIES LTD LTD
PH 09 582 0200

MT-512Ri Plus Operating Parameters

FUN	Parameter Description	Min	Max	Units
F01	Password 123	—	—	—
F02	Temperature reading offset (Probe calibration)	-5	5	°C
F03	Setpoint lock. Minimum setpoint allowed	-50	75	°C
F04	Setpoint lock. Maximum setpoint allowed	-50	75	°C
F05	Control differential (Hysteresis)	0.1	20	°C
F06	Compressor Start Delay	0	999	Sec
F07	Interval Between Defrost	1	999	Min
F08	Duration of Defrost	0	999	Min
F09	Start Defrost on power up of controller	0=No	1=Yes	—
F10	Lock temperature display during defrost	0=No	1=Yes	—
F11	Start delay on power up of controller	0	240	Min
F12	Run on of the compressor after the first cycle	0	240	Min
F13	Instrument address on RS-485 network (Sitrad)	1	247	—

Modification Of Set Point

Press & hold **Set** key for 2 sec and Release set when SEL is displayed.
Use the **Up** & **Down** keys to select the desired setpoint.
Press the **Set** Key to confirm new setpoint

Modification Of Parameters

Press & hold simultaneously the **Up** & **Down** Keys until FUN is displayed
Release the keys and wait until the first parameter FO1 is displayed.
Press the **Set** key and enter the password **123** using **Up** & **Down** keys
Confirm Password by pressing **Set.**
Use **Up** & **Down** keys to select next parameter then press **Set** to enter parameter
Use **Up** & **Down** keys to select desired value and press **Set** to confirm new setting.
Once parameter modification is completed press & hold the **Set** key until **---** is displayed.
The controller will now return to normal operation.

Activate A Manual Defrost

Press & hold **Up** key four 4 sec until **DEF** or **REF** is displayed
Release the Up key and controller will go into defrost.

Selecting Units Of Measure C ° / F °

Press & hold simultaneously the **Up** & **Down** Keys until FUN is displayed
Release the keys and wait until the first parameter FO1 is displayed.
Press the **Set** key and enter the password 231 using **Up** & **Down** keys and confirm with the set key
Press **Up** key and **UNI** appears. Press **set** key and select **F°** or **C°** using **up & down** keys.
Press set and **FAC** will appear and **set** again and **F01** will be displayed. Confirm by pressing and holding **set**.
Please note: Everytime the unit of measue is changed that all parameters will be reset back to factory settings

Minimum & Maximum Temperatures

Press the **Up** key & T1 will be displayed followed by the maximum & minimum temperature
To reset the logs keep the **Up** key pressed during the viewing of the minimum maximum temperatures until to be displayed.
RST is displayed

Basic parameters that need to be set. (Don't forget setpoint)

REFSPECS
REFRIGERATION SPECIALTIES LTD
PH 09 582 0200

PEGO ECP200 & ECP300 Expert Cheat Sheet

FUN	Parameter Description	Min	Max	Units	Def
	Level 1 Parameters (User level)				
r0	Control Differential Hysteresis	0.2	10	°C	2
d0	Interval between defrost	0	24	Hours	4
d2	End of defrost temperature	-35	45	°C	15
d3	Maximum duration of defrost	1	240	Min	25
d7	Dripping time after defrost (Defrost LED flashes when in dripping time)	0	10	Min	0
F5	Fan delay. Delay of evap fans after dripping time.	0	10	Min	0
A1	Low temperature alarm setpoint (Alarm LED & display temp flashes & buzzer)	-45	45	°C	-45
A2	High temperature alarm setpoint (Alarm LED & display temp flashes & buzzer)	-45	45	°C	45
tEu	Evaporator sensor temperature display.	Read only		°C	
	Level 2 Parameters (Installer Level)				
AC	Status of contacts for door Switch digital input with door closed	0=NO	1=NC	——	NO
F3	Fans run with compressor - (0=Fans On continuously 1= on/off with compressor)	0	1	——	1
F4	Fans on during defrost	0=Yes	1=No	——	1
dE	Enable/Disable evaporator sensor (Change to 1 when using as a chiller controller	1=disable	0=enable	——	0
d1	Defrost Type	0=element	1=hot gas	——	**0**
Ad	Serial address for Telenet	1	247	——	1
Ald	Alarm delay	1	240	Min	0
C1	Minimum time between Compressor stop and start.	0	15	Min	0
Cal	Temperature reading offset (Probe calibration)	-10	10	°C	0
PC	Status of contacts for compressor safety of digital input	0=NO	1=NC	——	NO
doC	Time delay for activation of door switch. (Compressor will shutdown)	0	5	Min	0
tdo	Re-start of compressor after door open. Will keep signaling door open alarm.	0	240	Min	0
Fst	High temperature fan cut out (Probe 2,Evap sensor)	-45	45	°C	0
Fd	Differential for restarting fans after high temp cut out (Fst)	0	10	°C	2
LSE	Setpoint Lock. Minimum setpoint allowed	-45	45	°C	-45
HSE	Setpoint Lock. Maximum setpoint allowed	-45	45	°C	45
tA	Status of alarm relay contact	0=NO	1=NC	——	1
AU	Configuration of Alarm/Aux relay. See manual for instructions	0	7	——	0
stA	Temperature setting of alarm relay. (When parameter AU=2_	-45	45	°C	0
In1	Configuration of In1 input 0=Man in cool room 1= Compressor safety	0	1	——	0
PS	Password level of protection. See manual for instructions	0	3	——	0
PA	Select Password 0=Disabled	0	999		0
reL	Indicates software release.				

Modification Of The Set Point

Press & hold the **Set** key while using the **Up &** Down keys to

select the desired setpoint. Release the **Set** key to return to normal operation.

The Setpoint will be saved automatically

Modification Of Level One Parameters

Press & hold simultaneously the **Up** & **Down** Keys until **r0** is displayed.
Use **Up** & **Down** keys to select next parameter and then press & hold **Set**
Use **Up** & **Down** keys to select desired value and then release **Set** the set key.
Once parameter modification is completed press & hold simultaneously
the **Up** & **Down** keys until the room temperature is displayed.

The controller will now return to normal operation saving the new settings.

Modification Of Level Two Parameters

Press & hold simultaneously the **Up & Down & Light** Keys until **AC** is displayed.
Release the **Up** & **Down** Keys
Selecting and changing a parameter is the same as the level one parameters above.
* Start on line 3.

Activate A Manual Defrost

Press & hold the **Down** key and controller will go into defrost.

Alarm & Error Codes

EO	Ambinet probe 1 is faulty or disconnected
E1	Defrost probe 2 is faulty or disconnected
E2	Eeprom memory error. All outputs except the alarm are deactivated
E8	Man in cold room alarm. Check Digital input INP1
EC	Compressor protection alarm. Check digital INP1
ED	Door open alarm. Check digital INP2

Temperature Flashing on the display

High or low temperature alarm. Check Parameters A1 or A2

REFSPECS
REFRIGERATION SPECIALTIES LTD
PH 09 582 0200

PEGO Expert Nano 1 Chiller Cheat Sheet

FUN	Parameter Description	Min	Max	Units	Def
	Level 1 Parameters (User level)				
r0	Control Differential (Hysteresis)	0.2	10	°C	2
d0	Interval between defrost	0	24	Hours	4
d3	Maximum duration of defrost	1	240	Min	25
A1	Low temperature alarm setpoint (Alarm LED & display temp flashes & buzzer)	-45	45	°C	-45
A2	High temperature alarm setpoint (Alarm LED & display temp flashes & buzzer)	-45	45	°C	45
	Level 2 Parameters (Installer Level)				
C1	Minimum time between Compressor stop and start.	0	15	Min	0
CE1	Run time of compressor in the event of a faulty probe (0=Disabled)	0	240	Min	0
CE2	Off time of compressor in the event of a faulty probe (0=Disabled)	0	240	Min	0
m0d	Functioning Mode (In heating mode defrost functions disabled)	0=Cooling	1=Heating	——	0
LSE	Setpoint Lock. Minimum setpoint allowed	-45	45	°C	-45
HSE	Setpoint Lock. Maximum setpoint allowed	-45	45	°C	45
Cal	Temperature reading offset (Probe calibration)	-10	10	°C	0
Ald	Alarm delay	1	240	Min	0
P1	Password level of protection. See manual for instructions	0	3	——	0
PA	Select Password 0=Disabled	0	999		0
reL	Indicates software release.				

Modification Of The Set Point

Press & hold the **Set** key while using the **Up &** Down keys to

select the desired setpoint. Release the **Set** key to return to normal operation.

The Setpoint will be saved automatically

Modification Of Level One Parameters

Press & hold simultaneously the **Up** & **Down** Keys until **r0** is displayed.
Use **Up** & **Down** keys to select next parameter and then press & hold **Set**
Use **Up** & **Down** keys to select desired value and then release **Set** the set key.
Once parameter modification is completed press & hold simultaneously
the **Up** & **Down** keys until the room temperature is displayed.
The controller will now return to normal operation saving the new settings.

Modification Of Level Two Parameters

Press & hold simultaneously the **Up, Down & Set** Keys until **C1** is displayed.
Selecting and changing a parameter is the same as the level one parameters above.
* Start on line 3.

Activate A Manual Defrost

Press & hold the **Down** key and controller will go into defrost.

Error And Alarm Codes

EO	Ambinet probe 1 is faulty or disconnected
E2	Eeprom memory error. All outputs except the alarm are deactivated
EL	Low Temperature Alarm. Check Parameter A1
EH	High Temperature Alarm. Check Parameter A2

REFSPECS
REFRIGERATION SPECIALTIES LTD
PH 09 582 0200

PEGO Expert Nano 3 (Freezer) Cheat Sheet

FUN	Parameter Description	Min	Max	Units	Def
	Level 1 Parameters (User level)				
r0	Control Differential Hysteresis	0.2	10	°C	2
d0	Interval between defrost	0	24	Hours	4
d2	End of defrost temperature	-35	45	°C	15
d3	Maximum duration of defrost	1	240	Min	25
d7	Dripping time after defrost (Defrost LED flashes when in dripping time)	0	10	Min	0
F5	Fan delay. Delay of evap fans after dripping time.	0	10	Min	0
A1	Low temperature alarm setpoint (Alarm LED & display temp flashes & buzzer)	-45	45	°C	-45
A2	High temperature alarm setpoint (Alarm LED & display temp flashes & buzzer)	-45	45	°C	45
tEu	Evaporator sensor temperature display.	Read only		°C	
	Level 2 Parameters (Installer Level)				
F3	Fans run with compressor - (0=Fans On continuously 1= on/off with compressor)	0	1	——	1
F4	Fans on during defrost	0=Yes	1=No	——	1
Fst	High temperature fan cut out (Probe 2,Evap sensor)	-45	45	°C	0
Fd	Differential for restarting fans after high temp cut out (Fst)	0	10	°C	2
dE	Enable/Disable evaporator sensor (Change to 1 when using as a chiller controller	1=disable	0=enable	——	0
d1	Defrost Type	0=element	1=hot gas	——	**0**
C1	Minimum time between Compressor stop and start.	0	15	Min	0
CE1	Run time of compressor in the event of a faulty probe (0=Disabled)	0	240	Min	0
CE2	Off time of compressor in the event of a faulty probe (0=Disabled)	0	240	Min	0
doC	Time compressor runs on activation of door switch (Compressor will shutdown)	0	5	Min	0
tdo	Re-start of compressor and fans during door open alarm.	0	240	Min	0
m0d	Functioning Mode (In heating mode defrost functions disabled)	0=Cooling	1=Heating	——	0
In1	Configuration of digital input (See installation for setting modes)	-6	6	——	1
D02	Output D02 configuration. 0= Defrost elements 1= Door light	0	1	——	0
LSE	Setpoint Lock. Minimum setpoint allowed	-45	45	°C	-45
HSE	Setpoint Lock. Maximum setpoint allowed	-45	45	°C	45
Cal	Temperature reading offset (Probe calibration)	-10	10	°C	0
AId	Alarm delay	1	240	Min	0
Ad	Serial address for Telenet	1	247	——	1
Ser	RS485 Protocol 0=Telnet,Pego Sys 2= Modbus- RTU Protocol				
P1	Password level of protection. See manual for instructions	0	3	——	0
PA	Select Password 0=Disabled	0	999		0
reL	Indicates software release.				

Modification Of The Set Point

Press & hold the **Set** key while using the **Up &** Down keys to

select the desired setpoint. Release the **Set** key to return to normal operation.

The Setpoint will be saved automatically

Modification Of Level One Parameters

Press & hold simultaneously the **Up** & **Down** Keys until **r0** is displayed.
Use **Up** & **Down** keys to select next parameter and then press & hold **Set**
Use **Up** & **Down** keys to select desired value and then release **Set** the set key.
Once parameter modification is completed press & hold simultaneously
the **Up** & **Down** keys until the room temperature is displayed.
The controller will now return to normal operation saving the new settings.

Modification Of Level Two Parameters

Press & hold simultaneously the **Up, Down & Set** Keys until **F3** is displayed.
Selecting and changing a parameter is the same as the level one parameters above.
* Start on line 3.

Activate A Manual Defrost

Press & hold the **Down** key and controller will go into defrost.

Error And Alarm Codes

EO	Ambinet probe 1 is faulty or disconnected
E1	Defrost probe 2 is faulty or disconnected
E2	Eeprom memory error. All outputs except the alarm are deactivated
E8	Man in cold room alarm. Check Digital input INP1
EC	Compressor protection alarm. Check digital INP1
ED	Door open alarm. Check digital INP2
EL	Low Temperature Alarm. Check Parameter A1
EH	High Temperature Alarm. Check Parameter A2

REFSPECS
REFRIGERATION SPECIALTIES LTD
PH 09 582 0200

PEGO ECP200 Base 4 Cheat Sheet

FUN	Parameter Description	Min	Max	Units	Def
	Level 1 Parameters (User level)				
r0	Control Differential Hysteresis	0.2	10	°C	2
d0	Interval between defrost	0	24	Hours	4
d2	End of defrost temperature	-35	45	°C	15
d3	Maximum duration of defrost	1	240	Min	25
d7	Dripping time after defrost (Defrost LED flashes when in dripping time)	0	10	Min	0
F5	Fan delay. Delay of evap fans after dripping time.	0	10	Min	0
A1	Low temperature alarm setpoint (Alarm LED & display temp flashes & buzzer)	-45	45	°C	-45
A2	High temperature alarm setpoint (Alarm LED & display temp flashes & buzzer)	-45	45	°C	45
tEu	Evaporator sensor temperature display.	Read only		°C	
	Level 2 Parameters (Installer Level)				
AC	Status of contacts for door Switch digital input with door closed	0=NO	1=NC	——	NO
F3	Fans run with compressor - (0=Fans On continuously 1= on/off with compressor)	0	1	——	1
F4	Fans on during defrost	0=Yes	1=No	——	1
dE	Enable/Disable evaporator sensor (Change to1 when using as a chiller controller	1=disable	0=enable	——	0
d1	Defrost Type	0=element	1=hot gas	——	**0**
Ad	Serial address for Telenet	1	247	——	1
Ald	Alarm delay	1	240	Min	0
C1	Minimum time between Compressor stop and start.	0	15	Min	0
Cal	Temperature reading offset (Probe calibration)	-10	10	°C	0
PC	Status of contacts for compressor safety digital input	0=NO	1=NC	——	NO
doC	Time delay for activation of door switch. (Compressor will shutdown)	0	5	Min	0
tdo	Re-start of compressor after door open. Will keep signaling door open alarm.	0	240	Min	0
Fst	High temperature fan cut out (Probe 2,Evap sensor)	-45	45	°C	0
Fd	Differential for restarting fans after high temp cut out (Fst)	0	10	°C	2
LSE	Setpoint Lock. Minimum setpoint allowed	-45	45	°C	-45
HSE	Setpoint Lock. Maximum setpoint allowed	-45	45	°C	45
tA	Status of alarm relay contact	0=NO	1=NC	——	1
AU	Configuration of Alarm/Aux relay. See manual for instructions	0	7	——	0
stA	Temperature setting of alarm relay. (When parameter AU=2_	-45	45	°C	0
In1	Configuration of In1 input 0=Man in cool room 1= Compressor safety	0	1	——	0
PS	Password level of protection. See manual for instructions	0	3	——	0
PA	Select Password 0=Disabled	0	999		0
reL	Indicates software release.				

Modification Of The Set Point

Press & hold the **Set** key while using the **Up &** Down keys to

select the desired setpoint. Release the **Set** key to return to normal operation.

The Setpoint will be saved automatically

Modification Of Level One Parameters

Press & hold simultaneously the **Up** & **Down** Keys until **r0** is displayed.
Use **Up** & **Down** keys to select next parameter and then press & hold **Set**
*Use **Up** & **Down** keys to select desired value and then release **Set** the set key.
Once parameter modification is completed press & hold simultaneously
the **Up** & **Down** keys until the room temperature is displayed.

The controller will now return to normal operation saving the new settings.

Modification Of Level Two Parameters

Press & hold simultaneously the **Up & Down & Light** Keys until **AC** is displayed.
Release the **Up** & **Down** Keys
Selecting and changing a parameter is the same as the level one parameters above.
* Start on line 3.

Activate A Manual Defrost

Press & hold the **Down** key and controller will go into defrost.

Alarm & Error Codes

EO	Ambinet probe 1 is faulty or disconnected
E1	Defrost probe 2 is faulty or disconnected
E2	Eeprom memory error. All outputs except the alarm are deactivated
E8	Man in cold room alarm. Check Digital input INP1
EC	Compressor protection alarm. Check digital INP1
ED	Door open alarm. Check digital INP2
	Temperature Flashing on the display
	High or low temperature alarm. Check Parameters A1 or A2

HEA Evaporator Data

Nomenclature				
Series	Fan size and No	Surface Area	Fin Spacing	Defrost
HEA	2501	m2	mm	D

Model			Surface (m^2)	Tube Volume (dm^3)				N.W. (kg)			Motor Axial							Defrost		
	t_e= -5℃	t_e= -25℃			L	W	H		Inlet	Outlet	Diameter (Φ mm)	N°	Voltage (V, 50/60Hz)	Power (W)	Current (A)	Air Flow (m^3/h)	Air Throw (m)	Coil (W)	Drain Pan (W)	Total (W)
	DT1=6K	DT1=6K																		
HEA 2501 09 4D	1284	1080	09	1.8	702	430	385	14	12	16	250	1	~ 220	55/57	0.24/0.24	1000	4	2 x 440	1 x 440	1320
HEA 3001 12 4D	1789	1508	12	2.4	702	430	495	19	12	19	300	1	~ 220	90/96	0.43/0.44	1930	5	3 x 440	1 x 440	1760
HEA 2502 17 4D	2487	2091	17	3.2	1094	430	385	25	12	19	250	2	~ 220	110/114	0.48/0.48	2000	6	2 x 730	1 x 730	2190
HEA 3002 23 4D	3630	3006	23	4.3	1094	430	495	32	12	22	300	2	~ 220	180/192	0.86/0.88	3860	7	3 x 730	1 x 730	2920
HEA 2503 26 4D	3645	3068	26	4.7	1486	430	385	36	12	22	250	3	~ 220	165/171	0.72/0.72	3000	7	2 x 1030	1 x 1030	3090
HEA 2504 35 4D	4862	4097	35	6.1	1878	430	385	47	12	22	250	4	~ 220	220/228	0.96/0.96	4000	8	2 x 1310	1 x 1310	3930
HEA 4501 31 4D Indent	5011		31	5.5	1094	460	635	41	12	22	450	1	~ 220	380/480	1.70/2.10	5400	9	4 x 730	1 x 730	3650
HEA 3003 35 4D	5501	4628	35	6.2	1486	430	495	46	12	22	300	3	~ 220	270/288	1.29/1.32	5790	10	3 x 1030	1 x 1030	4120
HEA 3004 46 4D	7238	6094	46	8.2	1878	430	495	60	15	28	300	4	~ 220	360/384	1.72/1.76	7720	11	3 x 1310	1 x 1310	5240
HEA 2506 52 4D Indent	7423		52	8.7	2662	430	385	70	15	28	250	6	~ 220	330/342	1.44/1.44	6000	11	2 x 1890	1 x 1890	5670
HEA 4502 61 4D	10021	8434	61	10.5	1878	460	635	82	15	28	450	2	3 ~ 380	760/940	1.64/1.68	10800	11	4 x 1310	1 x 1310	6550
HEA 3006 69 4D	10912	9171	69	11.6	2662	430	495	85	15	28	300	6	~ 220	540/576	2.58/2.64	11580	12	3 x 1890	1 x 1890	7560
HEA 4503 92 4D	14104	11914	92	15.5	2662	460	635	122	15	35	450	3	3 ~ 380	1140/1410	2.46/2.52	16200	13	4 x 1890	1 x 1890	9450

Optional model without heater available.

Prices and specification may change without notification. All prices are exclusive of GST and freight.

HEA Evaporator Data -2

Nomenclature				
Series	Fan size and No	Surface Area	Fin Spacing	Defrost
HEA	2501	m2	mm	D

Model	Duty Watts R404a		Surface (m^2)	Tube Volume (dm^3)	N.W. (kg)			Installation Dimensions						
	t_e= -5℃	t_e= -25℃				Inlet	Outlet	A	B	C	D	E	F	G
	DT1=6K	DT1=6K												
HEA 2501 09 4D	1284	1080	09	1.8	14	12	16	702	420			430	385	200
HEA 3001 12 4D	1789	1508	12	2.4	19	12	19	792	420			430	495	200
HEA 2502 17 4D	2487	2091	17	3.2	25	12	19	1094	812			430	385	200
HEA 3002 23 4D	3630	3006	23	4.3	32	12	22	1094	812			430	495	200
HEA 2503 26 4D	3645	3068	26	4.7	36	12	22	1486	1204			430	385	200
HEA 2504 35 4D	4862	4097	35	6.1	47	12	22	1878	1596			430	385	200
HEA 4501 31 4D Indent	5011		31	5.5	41	12	22	884	602			460	635	300
HEA 3003 35 4D	5501	4628	35	6.2	46	12	22	1486	1204			430	495	250
HEA 3004 46 4D	7238	6094	46	8.2	60	15	28	1878	1596			430	495	250
HEA 2506 52 4D Indent	7423		52	8.7	70	15	28	2662	2380	798	784	430	385	200
HEA 4502 61 4D	10021	8434	61	10.5	82	15	28	1878	1596	798		460	635	300
HEA 3006 69 4D	10912	9171	69	11.6	85	15	28	2662	2380	798	784	430	495	250
HEA 4503 92 4D	14104	11914	92	15.5	122	15	35	2662	2380	798	784	460	635	350

Optional model without heater available.

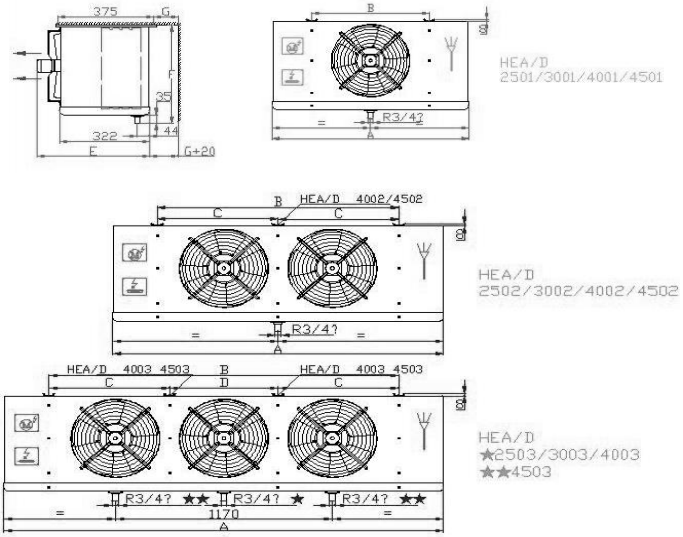

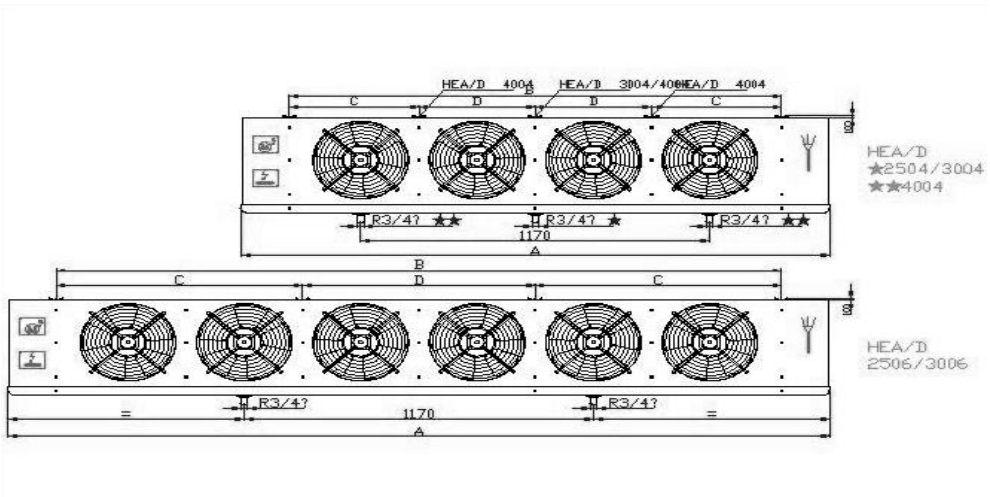

Prices and specification may change without notification. All prices are exclusive of GST and freight.

Condenser Data

Series	MODEL	AIR FLOW			FAN MOTOR DATA					Sound Pressure Level		REFRIGERANT CONNS		WEIGHT	DIMENSIONS		
		m3/hr		Power Supply	Fan Qty. x Ømm	Watts		Amps		DB (A) at 10m		INLET	OUTLET	kg	LENGTH	WIDTH	HEIGHT
		Low Speed	High Speed			Low Speed	High Speed	Low Speed	High Speed	Low Speed	High Speed	Ømm	Ømm		mm	mm	mm
C1-SERIES																	
C1 SERIES	C1 - 010		2692	240/1N/50	1 x 350		175		0.77		31	15.88	15.88	32	878	522	752
	C1 - 011		2539		1 x 350		175		0.77		31	15.88	15.88	35	878	522	752
	C1 - 012		2292		1 x 350		175		0.77		31	15.88	15.88	40	878	522	752
	C1 - 017	4874	5717	415/3/50	1 x 450	380	540	0.68	1.05	38	43	22.22	15.88	46	1028	625	796
	C1 - 020	4635	5330		1 x 450	380	540	0.68	1.05	38	43	22.22	19.05	50	1028	625	796
	C1 - 023	4220	4718		1 x 450	380	540	0.68	1.05	38	43	22.22	19.05	56	1028	625	796
	C1 - 025	6513	7701		1 x 500	490	790	0.89	1.45	43	49	22.22	22.22	63	1228	828	876
	C1 - 029	6386	7407		1 x 500	490	790	0.89	1.45	43	49	28.58	22.22	69	1228	828	876
	C1 - 035	6105	6838		1 x 500	490	790	0.89	1.45	43	49	28.58	22.22	76	1228	828	876
	C1 - 049	11549	17809		1 x 630	1600	2600	2.7	4.8	52	59	34.92	28.58	110	1528	1032	920
	C1 - 059	11086	16944		1 x 630	1600	2600	2.7	4.8	52	59	34.92	28.58	115	1528	1032	920
	C1 - 070	10093	15434		1 x 630	1600	2600	2.7	4.8	52	59	41.28	34.92	130	1528	1032	920
	C1 - 095	23081	35620		2 x 630	3200	5200	5.4	9.6	54	61	41.28	34.92	198	2828	1032	920
	C1 - 114	22157	33891		2 x 630	3200	5200	5.4	9.6	54	61	53.98	41.28	218	2828	1032	920
	C1 - 137	20175	30872		2 x 630	3200	5200	5.4	9.6	54	61	53.98	41.28	253	2828	1032	920
	C1 - 172	33244	50835		3 x 630	4800	7800	8.1	14.4	56	63	63.5	53.98	316	4128	1032	920
	C1 - 207	30261	46307		3 x 630	4800	7800	8.1	14.4	56	63	63.5	53.98	370	4128	1032	920
	C1 - 228	44314	67782		4 x 630	6400	10400	10.8	19.2	57	64	63.5	53.98	450	2828	2100	920
	C1 - 275	40350	61744		4 x 630	6400	10400	10.8	19.2	57	64	76.2	63.5	590	2828	2100	920
	C1 - 345	66488	101671		6 x 630	9600	15600	16.2	28.8	59	66	76.2	63.5	625	4128	2100	920
	C1 - 414	60522	92613		6 x 630	9600	15600	16.2	28.8	59	66	88.9	76.2	735	4128	2100	920
	C1 - 471	88686	135549		8 x 630	12800	20800	21.6	38.4	60	67	88.9	76.2	923	5480	2100	920
	C1 - 550	80709	123488		8 x 630	12800	20800	21.6	38.4	60	67	104.7	88.9	992	5480	2100	920
	C1 - 599	110917	169426		10 x 630	16000	26000	27	48	61	68	104.7	88.9	1132	6780	2100	920
	C1 - 711	100935	154328		10 x 630	16000	26000	27	48	61	68	114.3	88.9	1208	6780	2100	920
	C1 - 858	121158	185186		12 x 630	19200	31200	32.4	57.6	62	69	2x88.9	2x76.2	1420	8080	2100	920
	C1 - 1000	141365	216052		14 x 630	22400	31200	37.8	67.2	63	70	2x104.7	2x76.2	1625	9380	2100	920
	C1 - 1135	161553	246928		16 x 630	25600	41600	43.2	76.8	64	71	2x104.7	2x88.9	1832	10680	2100	920

Prices and specification may change without notification. All prices are exclusive of GST and freight.